© Éditeur officiel du Québec, 2019

Gazette officielle DU Québec

Part 2

No. 28
10 July 2019

Laws and Regulations

Volume 151

Summary

Table of Contents
Acts 2019
Regulations and other Acts
Draft Regulations
Treasury Board
Index

Legal deposit – 1st Quarter 1968
Bibliothèque nationale du Québec
© Éditeur officiel du Québec, 2019

All rights reserved in all countries. No part of this publication may be translated, used or reproduced for commercial purposes by any means, whether electronic or mechanical, including micro-reproduction, without the written authorization of the Québec Official Publisher.

NOTICE TO USERS

The *Gazette officielle du Québec* is the means by which the Québec Government makes its decisions official. It is published in two separate editions under the authority of the Act respecting the Centre de services partagés du Québec (chapter C-8.1.1) and the Regulation respecting the *Gazette officielle du Québec* (chapter C-8.1.1, r. 1). Partie 1, entitled "Avis juridiques", is published at least every Saturday. If a Saturday is a legal holiday, the Official Publisher is authorized to publish it on the preceding day or on the following Monday. Partie 2, entitled "Lois et règlements", and the English edition, Part 2 "Laws and Regulations", are published at least every Wednesday. If a Wednesday is a legal holiday, the Official Publisher is authorized to publish them on the preceding day or on the Thursday following such holiday.

Part 2 – LAWS AND REGULATIONS

Internet

The *Gazette officielle du Québec* Part 2 is available at 0:01 a.m. each Wednesday at the following address:

www.publicationsduquebec.gouv.qc.ca

The *Gazette officielle du Québec* published on the Internet is available to all free of charge.

Contents

Part 2 contains:

(1) Acts assented to;

(2) proclamations and Orders in Council for the coming into force of Acts;

(3) regulations and other statutory instruments whose publication in the *Gazette officielle du Québec* is required by law or by the Government;

(4) Orders in Council, decisions of the Conseil du trésor and minister's orders whose publication is required by law or by the Government;

(5) regulations made by courts of justice and quasi-judicial tribunals;

(6) drafts of the texts referred to in paragraphs 3 and 5 whose publication in the *Gazette officielle du Québec* is required by law before they are made, adopted or issued by the competent authority or before they are approved by the Government, a minister, a group of ministers or a government body; and

(7) any other document whose publication is required by the Government.

Rates*

1. Annual subscription:

	Printed version
Partie 1 "Avis juridiques":	$519
Partie 2 "Lois et règlements":	$711
Part 2 "Laws and Regulations":	$711

2. Acquisition of a printed issue of the *Gazette officielle du Québec*: $11.11 per copy.

3. Publication of a notice in Partie 1: $1.79 per agate line.

4. Publication of a notice in Part 2: $1.19 per agate line. A minimum rate of $260 is applied, however, in the case of a publication of fewer than 220 agate lines.

*** Taxes not included.**

General conditions

The Division of the *Gazette officielle du Québec* must receive manuscripts, **at the latest, by 11:00 a.m. on the Monday** preceding the week of publication. Requests received after that time will appear in the following edition. All requests must be accompanied by a signed manuscript. In addition, the electronic version of each notice to be published must be provided by e-mail, to the following address: gazette.officielle@cspq.gouv.qc.ca

For information concerning the publication of notices, please call:

Gazette officielle du Québec
1000, route de l'Église, bureau 500
Québec (Québec) G1V 3V9
Telephone: 418 644-7794
Fax: 418 644-7813
Internet: gazette.officielle@cspq.gouv.qc.ca

Subscriptions

For a subscription to the paper version of the *Gazette officielle du Québec*, please contact the customer service.

Les Publications du Québec
Customer service – Subscriptions
1000, route de l'Église, bureau 500
Québec (Québec) G1V 3V9
Telephone: 418 643-5150
Toll free: 1 800 463-2100
Fax: 418 643-6177
Toll free: 1 800 561-3479

All claims must be reported to us within 20 days of the shipping date.

Table of Contents

Page

Acts 2019

c. 11 An Act to increase Québec's socio-economic prosperity and adequately meet labour market needs through successful immigrant integration (Bill 9) 1405
c. 12 An Act respecting the laicity of the State (Bill 21) 1419
List of Bills sanctioned (16 June 2019) 1403

Regulations and other Acts

695-2019 Amendment to Order in Council 871-2000 dated 28 June 2000 concerning the exemption from the application of certain provisions of the Highway Safety Code or of a regulation thereunder 1437
698-2019 Determination of a section of Route 167 Nord, north of Chibougamau, for construction, repair or maintenance work and certain provisions of the Highway Safety Code or of a regulation thereunder 1437

Draft Regulations

Building Act — Construction Code 1439
Building Act — Safety Code 1612
Highway Safety Code — Use of tires specifically designed for winter driving 1612

Treasury Board

221070 Government and Public Employees Retirement Plan, An Act respecting the… — Regulation respecting the application (Amend.) 1615
221071 Pension Plan of Management Personnel, An Act respecting the… — Regulation respecting the application (Amend.) 1618
221072 Pension Plan of Peace Officers in Correctional Services, An Act respecting the… — Regulation respecting the application (Amend.) 1621

PROVINCE OF QUÉBEC

1ST SESSION

42ND LEGISLATURE

QUÉBEC, 16 JUNE 2019

OFFICE OF THE LIEUTENANT-GOVERNOR

Québec, 16 June 2019

This day, at eleven o'clock in the evening, His Excellency the Lieutenant-Governor was pleased to assent to the following bills:

9 An Act to increase Québec's socio-economic prosperity and adequately meet labour market needs through successful immigrant integration

21 An Act respecting the laicity of the State

To these bills the Royal assent was affixed by His Excellency the Lieutenant-Governor.

NATIONAL ASSEMBLY OF QUÉBEC

FIRST SESSION FORTY-SECOND LEGISLATURE

Bill 9
(2019, chapter 11)

An Act to increase Québec's socio-economic prosperity and adequately meet labour market needs through successful immigrant integration

Introduced 7 February 2019
Passed in principle 9 April 2019
Passed 16 June 2019
Assented to 16 June 2019

Québec Official Publisher
2019

EXPLANATORY NOTES

This Act aims to increase Québec's socio-economic prosperity and adequately meet labour market needs through successful immigrant integration.

To that end, the Act amends the Act respecting the Ministère de l'Immigration, de la Diversité et de l'Inclusion. It clarifies certain functions of the Minister of Immigration, Diversity and Inclusiveness and entrusts the Minister with new ones, including as regards coordination of the promotion of immigration to Québec, of prospection for and the recruitment of foreign nationals and of the implementation of reception, francization and integration services for immigrants.

In addition, the Act provides that the Minister may collect from immigrants the information necessary to know their situation, especially as regards their level of knowledge of French and their integration into the labour market, to put services in place for them and to assess their needs and satisfaction with respect to those services. It further provides that the departments and bodies concerned must communicate to the Minister, according to terms determined by agreement, the information necessary for the exercise of ministerial responsibilities and functions.

The Act also amends the Québec Immigration Act to clarify its objects, notably by stating that it aims to promote the integration of immigrants and of the family members accompanying them, more particularly through their learning French and learning about democratic values and the Québec values expressed by the Charter of human rights and freedoms.

Moreover, the Act empowers the Government to determine, by regulation, conditions affecting a foreign national's permanent residence which the Minister may impose when selecting such a foreign national but provides that the Minister may not impose such conditions on a minor child accompanying the foreign national. It also empowers the Minister to cancel an invitation to file an application for selection made in error to a foreign national.

The Act broadens the Minister's discretion to require that an undertaking be entered into on a foreign national's behalf if the Minister considers that such an undertaking is necessary to the success of the foreign national's stay or settlement in Québec.

The Act reiterates that the Minister develops reception, francization and integration programs for immigrants and implements immigrant support services in Québec and abroad, while specifying that the Minister fosters employers' commitment to those ends.

The Act specifies, among other things, that the Minister's decision regarding the management of applications may, if it so indicates, apply to applications received before its effective date.

The Act also allows the Minister to require a selected person to demonstrate the truthfulness of the facts set out in his or her statements and to call the person to an interview to that end.

The Act reviews the Government's regulatory powers in relation to employers wishing to hire a foreign national or permanent resident, extends the Government's regulatory power regarding the cases in which an applicant may be exempted from paying the required fees, grants the Government the regulatory power to provide for other cases in which the Minister may refuse to examine or reject a person's application, and contains certain adjustments pertaining to investigation and penal matters.

Subject to an exception, an application filed with the Minister before 2 August 2018 under the Regular Skilled Worker Program is terminated if, at the time the Act is assented to, the Minister has not yet made a selection, refusal or rejection decision on the application.

Lastly, the Act provides that if a foreign national whose application is terminated meets certain requirements, the Minister is to invite him or her to file an application for selection as a permanent resident under that program. In addition, it sets certain conditions for the processing of the application filed by such a foreign national.

LEGISLATION AMENDED BY THIS ACT:

– Québec Immigration Act (chapter I-0.2.1);

– Act respecting the Ministère de l'Immigration, de la Diversité et de l'Inclusion (chapter M-16.1).

Bill 9

AN ACT TO INCREASE QUÉBEC'S SOCIO-ECONOMIC PROSPERITY AND ADEQUATELY MEET LABOUR MARKET NEEDS THROUGH SUCCESSFUL IMMIGRANT INTEGRATION

THE PARLIAMENT OF QUÉBEC ENACTS AS FOLLOWS:

ACT RESPECTING THE MINISTÈRE DE L'IMMIGRATION, DE LA DIVERSITÉ ET DE L'INCLUSION

1. Section 2 of the Act respecting the Ministère de l'Immigration, de la Diversité et de l'Inclusion (chapter M-16.1) is amended by replacing "guidelines or policies on immigration and on the full participation, in French, of immigrants and ethnocultural minorities in Québec society, in full equality and in keeping with democratic values, and propose them to the Government" in the first paragraph by "and propose to the Government guidelines or policies on immigration and on the full participation, in French, of immigrants and ethnocultural minorities in Québec society, in full equality and in keeping with democratic values and the Québec values expressed by the Charter of human rights and freedoms (chapter C-12)".

2. Section 3 of the Act is amended by striking out the second paragraph.

3. Section 4 of the Act is amended by replacing paragraphs 2 to 9 by the following paragraphs:

"(2) to ensure and coordinate, with the support of the departments and bodies concerned, the promotion of immigration to Québec and prospection for and the recruitment of foreign nationals in foreign countries;

"(3) to offer immigrants a personalized support pathway, in particular by providing them with support in their immigration process and steps to learn French and integrate, and by informing them about democratic values and the Québec values expressed by the Charter of human rights and freedoms (chapter C-12), the importance of the French language, Québec culture and the vitality of the regions;

"(4) to select, as temporary or permanent immigrants, foreign nationals who are able to fully participate, in French, in particular by integrating into the labour market, in Québec society;

"(5) to contribute, through the selection of foreign nationals as temporary or permanent immigrants, to the occupancy and vitality of the regions and to meeting Québec's needs, including current labour market needs, and reflecting Québec's choices, in light of economic, demographic, linguistic and socio-cultural realities;

"(6) to see that families are reunited, to participate in international solidarity efforts and to respond to other humanitarian situations;

"(7) to coordinate, with the support of the departments and bodies concerned, the implementation of reception, francization and integration services for immigrants aimed, in particular, at their learning French and learning about democratic values and the Québec values expressed by the Charter of human rights and freedoms;

"(8) to foster the commitment and coordinate the actions of the departments and bodies and of the other social actors concerned, including the municipalities, in order to build more inclusive communities that contribute to immigrants' long-term settlement in the regions, promote immigrants' and ethnocultural minorities' full participation, in French, in community life, in full equality and in keeping with democratic values and the Québec values expressed by the Charter of human rights and freedoms, and contribute, through the establishment of harmonious intercultural relations, to the cultural enrichment of Québec society;

"(9) to assess immigration's contribution to Québec by ensuring follow-up of immigrants' situation for such purposes as knowing their level of knowledge of French and finding out how they are integrating into the labour market, with a view to ensuring their full participation in Québec society; and

"(10) to promote immigration's contribution to Québec's prosperity, to the preservation and vitality of French—the common language knowledge of which is the key to successful participation in community life—as well as to the occupancy and vitality of the regions and to Québec's international influence."

4. Section 7 of the Act is amended

(1) by inserting "and functions" after "responsibilities" in the introductory clause;

(2) by replacing paragraph 6 by the following paragraph:

"(6) collect from immigrants the information necessary

(*a*) to know their situation, in particular as regards their level of knowledge of French, their integration into the labour market, and obstacles to their full participation in Québec society;

(*b*) to develop and implement programs, guidelines and policies, monitor their relevance and effectiveness and assess the same on an ongoing basis; and

(*c*) to put services in place for immigrants and assess their needs and satisfaction with respect to those services."

5. The Act is amended by inserting the following section after section 7:

"**7.1.** The departments and bodies concerned periodically communicate to the Minister, according to terms determined by agreement, the information necessary for the exercise of ministerial responsibilities and functions."

QUÉBEC IMMIGRATION ACT

6. Section 1 of the Québec Immigration Act (chapter I-0.2.1) is amended by replacing the second paragraph by the following paragraphs:

"A further object of this Act is to promote the integration of immigrants and of the family members accompanying them, in particular through their learning French and learning about democratic values and the Québec values expressed by the Charter of human rights and freedoms (chapter C-12).

This Act promotes, through a shared commitment between Québec society and immigrants, the latter's full participation, in French and in full equality, in community life in addition to contributing, through the establishment of harmonious intercultural relations, to the cultural enrichment of Québec society."

7. Section 6 of the Act is amended by inserting "foreign" after "temporary" in paragraph 1.

8. Section 15 of the Act is replaced by the following section:

"**15.** The Government may, by regulation, determine the conditions an employer wishing to hire a foreign national who wishes to stay temporarily in Québec must comply with. It may, in particular, determine the cases in which an employer must obtain a positive assessment from the Minister as to the employment offer's impact on Québec's labour market before hiring such a foreign national and the conditions the employer must meet to obtain such an assessment.

Likewise, the Government may determine the conditions an employer must comply with after hiring such a foreign national, taking into account Québec employers' economic reality."

9. Section 18 of the Act is replaced by the following section:

"**18.** To settle permanently in Québec, foreign nationals must be selected by the Minister, unless they are covered by an exemption provided for by government regulation."

10. The Act is amended by inserting the following section after section 21:

"**21.1.** When selecting a foreign national, the Minister may impose conditions on the foreign national which affect the permanent residence granted under the Immigration and Refugee Protection Act (Statutes of Canada, 2001, chapter 27) in order to ensure, among other things, the protection of public health, the meeting of regional and sectoral labour needs, the financing or entrepreneurial acquisition or regional or sectoral creation of enterprises, or the foreign national's linguistic, social or economic integration. The Minister may not impose such conditions on a minor child accompanying the foreign national to Québec.

The Government determines, by regulation, the conditions the Minister may impose and the cases in which the Minister may impose, amend, lift or cancel them."

11. Section 26 of the Act is amended by replacing "is to include selection" by "may include selection factors and".

12. Section 29 of the Act is replaced by the following section:

"**29.** The Government may, by regulation, determine the conditions an employer wishing to hire a foreign national who wishes to settle permanently in Québec or a permanent resident who has already settled in Québec must comply with. It may, in particular, determine the cases in which an employer may, in order to facilitate a foreign national's selection for permanent immigration, file an application with the Minister for the validation of the employment offer and the conditions the employer must meet to obtain such validation.

Likewise, the Government may determine the conditions an employer must comply with after hiring such a foreign national or permanent resident, taking into account Québec employers' economic reality."

13. Section 40 of the Act is amended by replacing "When exercising discretion under the first paragraph of section 37 or 38, the Minister" by "The Minister".

14. The Act is amended by inserting the following section after section 49:

"**49.1.** The Minister may cancel an invitation to file an application for selection made in error to a foreign national.

If the foreign national has already filed an application for selection following such an invitation, the Minister may terminate it. In such a case, the Minister must return the required fees paid by the foreign national."

15. Section 50 of the Act is amended

(1) by inserting "economic and labour" after "Québec's" in the first paragraph;

(2) by replacing "and the order of priority for processing and disposing of applications that have yet to be examined" in the second paragraph by "the order of priority for processing applications, the suspension of the processing of applications and the disposition of applications not yet under examination";

(3) by replacing the third paragraph by the following paragraph:

"The Minister's decision may, if it so specifies, apply to applications received before its effective date. In such a case, the Minister informs the persons concerned and, if applicable, returns the sums they have paid as fees."

16. Section 54 of the Act is amended by replacing "or files an application with the Minister" by ", files an application with or has been selected by the Minister".

17. Section 55 of the Act is amended by adding the following sentence at the end: "The Minister may, among other things, call the person to an interview."

18. Section 56 of the Act is amended

(1) by replacing "if" in the introductory clause by "in the following cases:";

(2) by adding the following paragraph at the end:

"(3) any other case provided for by government regulation."

19. Section 57 of the Act is amended

(1) by replacing "if" in the introductory clause by "in the following cases:";

(2) by adding the following paragraph at the end:

"(6) any other case provided for by government regulation."

20. Section 60 of the Act is replaced by the following section:

"**60.** The Minister develops reception, francization and integration programs for immigrants. Such programs are aimed in particular at their learning French and learning about democratic values and the Québec values expressed by the Charter of human rights and freedoms (chapter C-12) and at the establishment of harmonious intercultural relations. By offering support services to immigrants, such programs contribute to promoting their full participation, in French and in full equality, in community life and their long-term settlement in the regions.

Within that framework, the Minister establishes and implements services, in Québec and abroad, in the areas under the Minister's responsibility while fostering employers' commitment. The Minister determines eligibility requirements for those services."

21. The Act is amended by inserting the following section after section 61:

"**61.1.** The conditions the Government determines, by regulation, under sections 15 and 29 may, in particular, aim to ensure the success of reception, francization and integration programs and services."

22. Section 73 of the Act is amended by inserting "foreign" after "temporary" in paragraph 1.

23. Section 82 of the Act is amended by replacing "a foreign national" by "an applicant".

24. Section 88 of the Act is amended by inserting "or a presiding justice of the peace" after "Court of Québec" in the introductory clause of the first paragraph.

25. Section 92 of the Act is amended

(1) by inserting the following subparagraph after subparagraph 2 of the first paragraph:

"(3) profits in any manner from an undertaking entered into on behalf of a foreign national and of the latter's accompanying family members or from actions taken for the purpose of entering into such an undertaking, including by collecting interest on an investment or accepting a gift, except if collecting reasonable fees for services rendered,";

(2) by inserting the following paragraph after the first paragraph:

"The Government may, by regulation, define what are reasonable fees under subparagraph 3 of the first paragraph."

26. Section 126 of the Act is replaced by the following section:

"**126.** The Government may, by a regulation made within 24 months after 2 August 2018, enact any transitional measure for the purposes of the provisions of this Act, including those concerning applications filed with the Minister before that date."

FINAL PROVISIONS

27. The first regulation made under the second paragraph of section 21.1 of the Québec Immigration Act (chapter I-0.2.1), enacted by section 10, must be examined by the competent committee of the National Assembly for a period not exceeding three hours before it is enacted by the Government.

28. An application filed with the Minister before 2 August 2018 under the Regular Skilled Worker Program is terminated if, on 16 June 2019, the Minister has not made a selection, refusal or rejection decision on the application.

Subject to section 33, any required fees paid by an applicant having filed such an application must be returned, without interest, to the applicant.

No damages or indemnity may be claimed from the Government, the Minister or any of their subordinates or mandataries in connection with such an application.

The first paragraph does not apply to an application whose purpose, with respect to a prior application on which a selection decision has already been made, is to add a family member of the foreign national.

29. The Minister invites, not later than 16 January 2020, every foreign national whose application is terminated under section 28 to file an application for selection as a permanent resident under the Regular Skilled Worker Program if the foreign national

(1) has submitted an expression of interest to the Minister not later than 16 December 2019; and

(2) is in either of the following situations:

(*a*) the application terminated under section 28 was filed with the Minister by the foreign national under section 5.01 of the Regulation respecting the selection of foreign nationals (chapter I-0.2, r. 4); or

(*b*) the foreign national is staying in Québec on 16 June 2019 and is, at that time, the holder of a study permit or work permit issued under the Immigration and Refugee Protection Regulations (SOR/2002-227).

The Minister enters the expression of interest referred to in subparagraph 1 of the first paragraph in the expressions-of-interest bank referred to in section 43 of the Québec Immigration Act.

30. The Minister invites the foreign nationals referred to in section 29 according to a ranking corresponding to the date on which their expression of interest was entered in the expressions-of-interest bank. The Minister determines the number of foreign nationals invited under each invitation, taking into account the Minister's processing capacity.

The Minister publishes the decision in any medium the Minister considers appropriate.

A decision made by the Minister under the first paragraph is not a regulation within the meaning of the Regulations Act (chapter R-18.1).

31. A foreign national who is invited by the Minister must, within 60 days after receiving the invitation, file an application for selection.

Failing that, the foreign national receives a refund in accordance with the second paragraph of section 28, he or she may not be invited again by the Minister under section 29 and his or her expression of interest becomes invalid.

If, before the expiry of the time limit specified in the first paragraph, the foreign national notifies the Minister that he or she does not wish to file an application for selection, the second paragraph applies, but the foreign national's expression of interest remains in the expressions-of-interest bank. The expression of interest remains valid until the end of the period specified in section 27 of the Québec Immigration Regulation (chapter I-0.2.1, r. 3).

32. For the purposes of the definition of "dependent child" in the Québec Immigration Regulation and for the purpose of awarding points in accordance with the Selection grid for the economic class in Schedule A to that Regulation, the age assigned to a foreign national who files an application for selection following an invitation made under section 29 and to his or her accompanying family members is the age they were at the time the application referred to in section 28 was filed.

33. The required fees paid by a foreign national who filed an application that is terminated under section 28 stand in lieu of the fees required, for the foreign national and the family members who were to accompany him or her, for an application he or she files following an invitation made under section 29, to the extent that no fees were refunded to him or her under the second paragraph of section 28.

However, the fees required under the Québec Immigration Act for the foreign national's accompanying family members who were not included in the application terminated under section 28 are payable.

34. The application of sections 29 to 33 with respect to a foreign national does not prevent the application, with respect to that foreign national, of Division II of Chapter V of the Québec Immigration Act.

35. This Act comes into force on 16 June 2019, except sections 9 and 25, which come into force on the date to be set by the Government.

NATIONAL ASSEMBLY OF QUÉBEC

FIRST SESSION FORTY-SECOND LEGISLATURE

Bill 21
(2019, chapter 12)

An Act respecting the laicity of the State

Introduced 28 March 2019
Passed in principle 4 June 2019
Passed 16 June 2019
Assented to 16 June 2019

Québec Official Publisher
2019

EXPLANATORY NOTES

The purpose of this Act is to affirm the laicity of the State and to set out the requirements that follow from it.

To that end, the Act provides that the laicity of the State is based on four principles: the separation of State and religions, the religious neutrality of the State, the equality of all citizens, and freedom of conscience and freedom of religion. Parliamentary, government and judicial institutions are bound to adhere to all these principles in pursuing their missions, and State laicity requires that all persons have the right to lay institutions and lay public services. However, with respect to judges of the Court of Québec, the Human Rights Tribunal, the Professions Tribunal and the municipal courts, as well as presiding justices of the peace, responsibility for establishing rules translating the requirements of State laicity and for ensuring their implementation is assigned to the Conseil de la magistrature.

The Act proposes to prohibit certain persons from wearing religious symbols while exercising their functions. However, the prohibition does not apply to certain persons holding positions at the time the bill is introduced, subject to the conditions specified by the Act.

Under the Act, personnel members of a body must exercise their functions with their face uncovered, and persons who present themselves to receive a service from such a personnel member must have their face uncovered when doing so is necessary to allow their identity to be verified or for security reasons. Persons who fail to comply with that obligation may not receive the service. However, those obligations do not apply to persons whose face is covered for reasons of health or a handicap, or because of the requirements tied to their functions or to the performance of certain tasks.

In addition, the Act amends the Charter of human rights and freedoms to specify that persons must maintain proper regard for State laicity in exercising their fundamental freedoms and rights.

The Act's provisions prevail over those of any subsequent Act, unless expressly stated otherwise. The Act must not be interpreted as requiring an institution to remove or alter an immovable, or movable property adorning an immovable, nor as affecting toponymy, or the name of or name used by an institution. The Act also grants ministers powers to verify compliance with the measures it sets out.

The Act has effect despite certain provisions of the Charter of human rights and freedoms and the Constitution Act, 1982.

Lastly, the Act contains consequential amendments and various interpretative, transitional and final provisions.

LEGISLATION AMENDED BY THIS ACT:

– Charter of human rights and freedoms (chapter C-12);

– Act to foster adherence to State religious neutrality and, in particular, to provide a framework for requests for accommodations on religious grounds in certain bodies (R-26.2.01).

Bill 21

AN ACT RESPECTING THE LAICITY OF THE STATE

AS the Québec nation has its own characteristics, one of which is its civil law tradition, distinct social values and a specific history that have led it to develop a particular attachment to State laicity;

AS the Québec State stands on constitutional foundations that have been enriched over the years by the passage of a number of fundamental laws;

AS, in accordance with the principle of parliamentary sovereignty, it is incumbent on the Parliament of Québec to determine the principles according to which and manner in which relations between the State and religions are to be governed in Québec;

AS it is important that the paramountcy of State laicity be enshrined in Québec's legal order;

AS the Québec nation attaches importance to the equality of women and men;

AS a stricter duty of restraint regarding religious matters should be established for persons exercising certain functions, resulting in their being prohibited from wearing religious symbols in the exercise of their functions;

AS State laicity contributes to the fulfilment of the magistrature's duty of impartiality;

AS State laicity should be affirmed in a manner that ensures a balance between the collective rights of the Québec nation and human rights and freedoms;

THE PARLIAMENT OF QUÉBEC ENACTS AS FOLLOWS:

CHAPTER I

AFFIRMATION OF THE LAICITY OF THE STATE

1. The State of Québec is a lay State.

2. The laicity of the State is based on the following principles:

(1) the separation of State and religions;

(2) the religious neutrality of the State;

(3) the equality of all citizens; and

(4) freedom of conscience and freedom of religion.

3. State laicity requires parliamentary, government and judicial institutions to comply with all the principles listed in section 2, in fact and in appearance, in pursuing their missions.

For the purposes of this chapter,

(1) "parliamentary institutions" means the National Assembly and the persons appointed or designated by it to an office under its authority;

(2) "government institutions" means the bodies listed in paragraphs 1 to 10 of Schedule I;

(3) "judicial institutions" means the Court of Appeal, the Superior Court, the Court of Québec, the Human Rights Tribunal, the Professions Tribunal and the municipal courts.

4. In addition to the requirement under section 3, State laicity requires compliance with the prohibition on wearing religious symbols under Chapter II of this Act, and with the duty of religious neutrality under Chapter II of the Act to foster adherence to State religious neutrality and, in particular, to provide a framework for requests for accommodations on religious grounds in certain bodies (chapter R-26.2.01), by the persons subject to that prohibition or that duty.

State laicity also requires that all persons have the right to lay parliamentary, government and judicial institutions, and to lay public services, to the extent provided for in this Act and in the Act to foster adherence to State religious neutrality and, in particular, to provide a framework for requests for accommodations on religious grounds in certain bodies.

5. It is incumbent on the Conseil de la magistrature, with respect to judges of the Court of Québec, the Human Rights Tribunal, the Professions Tribunal and the municipal courts, as well as presiding justices of the peace, to establish rules translating the requirements of State laicity and to ensure their implementation.

Despite subparagraph 3 of the second paragraph of section 3, the requirement to comply with the principles set out in section 2 applies to judges only to the extent provided for in this section.

CHAPTER II

PROHIBITION ON WEARING RELIGIOUS SYMBOLS

6. The persons listed in Schedule II are prohibited from wearing religious symbols in the exercise of their functions.

A religious symbol, within the meaning of this section, is any object, including clothing, a symbol, jewellery, an adornment, an accessory or headwear, that

(1) is worn in connection with a religious conviction or belief; or

(2) is reasonably considered as referring to a religious affiliation.

CHAPTER III

SERVICES WITH FACE UNCOVERED

7. For the purposes of this chapter, "personnel member of a body" means a member of the personnel of a body listed in Schedule I or a person listed in Schedule III who is considered to be such a member.

8. Personnel members of a body must exercise their functions with their face uncovered.

Similarly, persons who present themselves to receive a service from a personnel member of a body must have their face uncovered where doing so is necessary to allow their identity to be verified or for security reasons. Persons who fail to comply with that obligation may not receive the service requested, where applicable.

For the purposes of the second paragraph, persons are deemed to be presenting themselves to receive a service when they are interacting or communicating with a personnel member of a body in the exercise of the personnel member's functions.

9. Section 8 does not apply to persons whose face is covered for health reasons or because of a handicap or of requirements tied to their functions or to the performance of certain tasks.

10. A body listed in Schedule I may require, from any persons or partnerships with whom or which it enters into a contract, or to whom or which it grants financial assistance, that members of their personnel exercise their functions with their face uncovered, if the contract or the granting of financial assistance is for the provision of services that are inherent in the body's mission or if the services are performed in its personnel's place of work. The same applies to a parliamentary institution referred to in subparagraph 1 of the second paragraph of section 3.

CHAPTER IV

MISCELLANEOUS PROVISIONS

11. The provisions of this Act prevail over any contrary provisions of any subsequent Act, unless such an Act expressly states that it applies despite this Act.

The provisions of sections 1 to 3 do not prevail over any contrary provisions of any previous Act.

12. A minister may, jointly with the minister responsible for the administration of this Act, verify compliance with the measures set out in this Act within a body listed in Schedule I or with a person referred to in paragraph 11 of Schedule III that is under his or her responsibility or jurisdiction. A minister may also designate, in writing, a person to conduct such verification. At the request of the minister concerned or the designated person, the body or the person being verified must send or otherwise make available to the minister or designated person all documents and information the minister or designated person considers necessary to conduct the verification.

The minister concerned may, in writing and within the time he or she specifies, require the body or the person to take corrective measures, conduct any appropriate follow-up and comply with any other measure, including oversight and support measures.

For the purposes of this section, the following bodies and persons, among others, are under the jurisdiction of the following ministers:

(1) the bodies listed in paragraph 5 of Schedule I: the Minister of Municipal Affairs, Regions and Land Occupancy;

(2) the bodies listed in paragraph 6 of Schedule I: the Minister of Transport;

(3) the bodies listed in paragraphs 7 and 12 of Schedule I: the Minister of Education, Recreation and Sports or, as applicable, the Minister of Higher Education, Research, Science and Technology, according to their respective responsibilities;

(4) the bodies listed in paragraphs 8 and 13 of Schedule I: the Minister of Health and Social Services; and

(5) the bodies listed in paragraph 11 of Schedule I and the person referred to in paragraph 11 of Schedule III: the Minister of Families, Seniors and the Status of Women.

This section does not apply to the parliamentary institutions and judicial institutions referred to in subparagraph 1 or 3 of the second paragraph of section 3.

13. It is incumbent on the person exercising the highest administrative authority, where applicable, over the persons referred to in section 6 or the first paragraph of section 8 to take the necessary measures to ensure compliance with the measures set out in those provisions. That function may be delegated to a person within the same organization.

The persons referred to in section 6 or the first paragraph of section 8 are, in the event of failure to comply with the measures set out in those provisions, subject to a disciplinary measure or, if applicable, to any other measure resulting from the enforcement of the rules governing the exercise of their functions.

14. No accommodation or other derogation or adaptation, except those provided for in this Act, may be granted in connection with the provisions concerning the prohibition on wearing religious symbols or concerning the obligations relating to services with one's face uncovered.

15. Where the prohibition on wearing religious symbols applies to a lawyer or notary referred to in paragraph 8 of Schedule II, the obligation is deemed to be an integral part of the legal services contract under which the lawyer or notary acts.

16. A provision of a collective agreement, group agreement or any other contract concerning conditions of employment that is incompatible with the provisions of this Act is absolutely null.

17. Sections 1 to 3 must not be interpreted as requiring an institution referred to in section 3 to remove or alter an immovable, or movable property adorning an immovable. However, an institution may, on its own initiative, remove or alter an immovable or such movable property.

Nor must those sections be interpreted as affecting toponymy, or the name of or name used by an institution referred to in section 3.

CHAPTER V

AMENDING PROVISIONS

CHARTER OF HUMAN RIGHTS AND FREEDOMS

18. The Charter of human rights and freedoms (chapter C-12) is amended by inserting the following paragraph after the third paragraph of the preamble:

"Whereas the Québec nation considers State laicity to be of fundamental importance;".

19. Section 9.1 of the Charter is amended by inserting "State laicity," after "democratic values," in the first paragraph.

ACT TO FOSTER ADHERENCE TO STATE RELIGIOUS NEUTRALITY AND, IN PARTICULAR, TO PROVIDE A FRAMEWORK FOR REQUESTS FOR ACCOMMODATIONS ON RELIGIOUS GROUNDS IN CERTAIN BODIES

20. The preamble to the Act to foster adherence to State religious neutrality and, in particular, to provide a framework for requests for accommodations on religious grounds in certain bodies (chapter R-26.2.01) is repealed.

21. Section 1 of the Act is amended

(1) by replacing the first paragraph by the following paragraph:

"This Act imposes, to the extent it provides for, a duty of religious neutrality on personnel members of public bodies in the exercise of their functions, in accordance with the requirements of State laicity.";

(2) by striking out the second paragraph.

22. Section 2 of the Act is amended, in the first paragraph,

(1) by inserting ", as well as bodies whose capital forms part of the domain of the State" at the end of subparagraph 2;

(2) by inserting "and regional" after "municipal" in subparagraph 5;

(3) by inserting ", the Commission scolaire du Littoral established by the Act respecting the Commission scolaire du Littoral (1966-1967, chapter 125)" after "Education Act (chapter I-13.3)" in subparagraph 7;

(4) by striking out "or any of its committees" in subparagraph 9.

23. Section 7 of the Act is amended

(1) by replacing "any person or partnership with whom it has entered" by "any persons or partnerships with whom or which it enters";

(2) by replacing "service contract or subsidy agreement" by "contract, or to whom or which it grants financial assistance,";

(3) by replacing "or agreement relates to" by "or the granting of financial assistance is for";

(4) by replacing "that are performed in its personnel's place of work" by "if the services are performed in its personnel's place of work".

24. Section 9 of the Act and Division II of Chapter III of the Act, comprising section 10, are repealed.

25. Section 12 of the Act is amended by replacing the second paragraph by the following paragraph:

"The guidelines must be made public using the means the Minister considers appropriate."

26. Division IV of Chapter III of the Act, comprising section 15, is repealed.

27. Section 16 of the Act is repealed.

28. Section 17 of the Act is amended by replacing the last sentence of the first paragraph by the following sentences: "That person may delegate the function to a person within his or her organization. In addition, that person must designate an accommodation officer within the personnel."

29. The Act is amended by inserting the following section after section 17:

"**17.1.** No accommodation or other derogation or adaptation, except those provided for in this Act, may be granted in connection with the provisions of this Act that concern fulfillment of the duty of religious neutrality."

30. Section 19 of the Act is replaced by the following section:

"**19.** The minister designated by the Government is responsible for the administration of this Act."

CHAPTER VI

TRANSITIONAL AND FINAL PROVISIONS

31. Section 6 does not apply

(1) to persons referred to in any of paragraphs 2, 3, 7 and 9 of Schedule II on 27 March 2019, for as long as they exercise the same function within the same organization;

(2) to persons referred to in paragraph 4 or 5 of Schedule II on 27 March 2019, until the end of their mandate;

(3) to persons, except the Minister of Justice and Attorney General, referred to in paragraph 6 of Schedule II on 27 March 2019, for as long as they exercise the same function and are under the authority of the same organization;

(4) to persons referred to in paragraph 8 of Schedule II acting in accordance with a legal services contract entered into before 16 June 2019, unless the contract is renewed after that date;

(5) to persons referred to in paragraph 10 of Schedule II on 27 March 2019, for as long as they exercise the same function within the same school board.

32. Until the Government makes an order designating a minister responsible for the administration of this Act and the Act to foster adherence to State religious neutrality and, in particular, to provide a framework for requests for accommodations on religious grounds in certain bodies (chapter R-26.2.01), the Minister of Immigration, Diversity and Inclusiveness is responsible for their administration.

33. This Act and the amendments made by it to the Act to foster adherence to State religious neutrality and, in particular, to provide a framework for requests for accommodations on religious grounds in certain bodies apply despite sections 1 to 38 of the Charter of human rights and freedoms (chapter C-12).

34. This Act and the amendments made by Chapter V of this Act have effect notwithstanding sections 2 and 7 to 15 of the Constitution Act, 1982 (Schedule B to the Canada Act, chapter 11 in the 1982 volume of the Acts of the Parliament of the United Kingdom).

35. The minister designated by the Government is responsible for the administration of this Act.

36. This Act comes into force on 16 June 2019.

SCHEDULE I
(*Sections 3, 7 and 10*)

BODIES

(1) government departments;

(2) budget-funded bodies, bodies other than budget-funded bodies and government enterprises listed in Schedules 1 to 3 to the Financial Administration Act (chapter A-6.001), including the persons listed in those schedules, as well as bodies whose capital forms part of the domain of the State;

(3) bodies and persons whose personnel is appointed in accordance with the Public Service Act (chapter F-3.1.1);

(4) government agencies listed in Schedule C to the Act respecting the process of negotiation of the collective agreements in the public and parapublic sectors (chapter R-8.2), including the persons listed in that schedule;

(5) municipalities, metropolitan communities, intermunicipal boards and municipal and regional housing bureaus, except municipalities governed by the Cree Villages and the Naskapi Village Act (chapter V-5.1) or the Act respecting Northern villages and the Kativik Regional Government (chapter V-6.1);

(6) public transit authorities, the Autorité régionale de transport métropolitain and any other operator of a shared transportation system;

(7) school boards established under the Education Act (chapter I-13.3), the Commission scolaire du Littoral established by the Act respecting the Commission scolaire du Littoral (1966-1967, chapter 125), the Comité de gestion de la taxe scolaire de l'île de Montréal, general and vocational colleges established under the General and Vocational Colleges Act (chapter C-29), and university-level educational institutions listed in paragraphs 1 to 11 of section 1 of the Act respecting educational institutions at the university level (chapter E-14.1);

(8) public institutions governed by the Act respecting health services and social services (chapter S-4.2), except public institutions referred to in Parts IV.1 and IV.3 of that Act, joint procurement groups referred to in section 435.1 of that Act, and health communication centres referred to in the Act respecting pre-hospital emergency services (chapter S-6.2);

(9) bodies the majority of whose members are appointed by the National Assembly;

(10) inquiry commissions established under the Act respecting public inquiry commissions (chapter C-37);

(11) childcare centres, home childcare coordinating offices and subsidized day care centres governed by the Educational Childcare Act (chapter S-4.1.1);

(12) institutions accredited for the purposes of subsidies under the Act respecting private education (chapter E-9.1), and institutions whose instructional program is the subject of an international agreement within the meaning of the Act respecting the Ministère des Relations internationales (chapter M-25.1.1); and

(13) private institutions under agreement, intermediary resources and family-type resources governed by the Act respecting health services and social services.

SCHEDULE II
(*Sections 6, 15 and 31*)

PERSONS SUBJECT TO THE PROHIBITION ON WEARING RELIGIOUS SYMBOLS IN THE EXERCISE OF THEIR FUNCTIONS

(1) the President and Vice-Presidents of the National Assembly;

(2) administrative justices of the peace referred to in section 158 of the Courts of Justice Act (chapter T-16), special clerks, clerks, deputy clerks, sheriffs and deputy sheriffs referred to in sections 4 to 5 of that Act, clerks and deputy clerks referred to in section 57 of the Act respecting municipal courts (chapter C-72.01), and bankruptcy registrars;

(3) members or commissioners, as applicable, who exercise their functions within the Comité de déontologie policière, the Commission d'accès à l'information, the Commission de la fonction publique, the Commission de protection du territoire agricole du Québec, the Commission des transports du Québec, the Commission municipale du Québec, the Commission québécoise des libérations conditionnelles, the Régie de l'énergie, the Régie des alcools, des courses et des jeux, the Régie des marchés agricoles et alimentaires du Québec, the Régie du bâtiment du Québec, the Régie du logement, the Financial Markets Administrative Tribunal, the Administrative Tribunal of Québec or the Administrative Labour Tribunal, as well as disciplinary council chairs who exercise their functions within the Bureau des présidents des conseils de discipline;

(4) commissioners appointed by the Government under the Act respecting public inquiry commissions (chapter C-37), and lawyers or notaries acting for such a commission;

(5) arbitrators appointed by the Minister of Labour whose name appears on a list drawn up by that minister in accordance with the Labour Code (chapter C-27);

(6) the Minister of Justice and Attorney General, the Director of Criminal and Penal Prosecutions, and persons who exercise the function of lawyer, notary or criminal and penal prosecuting attorney, including legal managers who supervise the work of those persons or of other legal managers, and who are under the authority of a government department, the Director of Criminal and Penal Prosecutions, the National Assembly, a person appointed or designated by the National Assembly to an office under its authority, a body referred to in paragraph 3, the Autorité des marchés financiers, the Autorité des marchés publics, the Commission des droits de la personne et des droits de la jeunesse, Revenu Québec or a body or person whose personnel is appointed in accordance with the Public Service Act (chapter F-3.1.1), except the Centre de services partagés du Québec, the Conseil de gestion de l'assurance parentale, the Institut de la statistique du Québec, La Financière agricole du Québec, the Société d'habitation du Québec and Transition énergétique Québec;

(7) persons who exercise the function of lawyer and are employed by a prosecutor referred to in paragraph 2 or 3 of article 9 of the Code of Penal Procedure (chapter C-25.1), unless the prosecutor is referred to in paragraph 6, when those persons are acting in criminal or penal matters for a prosecutor before the courts or with third persons;

(8) lawyers or notaries acting before the courts or with third persons in accordance with a legal services contract entered into with a minister, the Director of Criminal and Penal Prosecutions, the National Assembly, a person appointed or designated by the National Assembly to exercise a function under its authority, a body referred to in paragraph 3, the Autorité des marchés financiers, the Autorité des marchés publics, the Commission des droits de la personne et des droits de la jeunesse, Revenu Québec, a body or person whose personnel is appointed in accordance with the Public Service Act, except the Centre de services partagés du Québec, the Conseil de gestion de l'assurance parentale, the Institut de la statistique du Québec, La Financière agricole du Québec, the Société d'habitation du Québec and Transition énergétique Québec, or lawyers acting in criminal or penal matters before the courts or with third persons in accordance with a legal services contract entered into with a prosecutor referred to in paragraph 7;

(9) peace officers who exercise their functions mainly in Québec; and

(10) principals, vice principals and teachers of educational institutions under the jurisdiction of a school board established under the Education Act (chapter I-13.3) or of the Commission scolaire du Littoral established by the Act respecting the Commission scolaire du Littoral (1966-1967, chapter 125).

SCHEDULE III
(*Section 7*)

PERSONS CONSIDERED TO BE PERSONNEL MEMBERS OF A BODY FOR THE PURPOSES OF MEASURES RELATING TO SERVICES WITH FACE UNCOVERED

(1) Members of the National Assembly;

(2) elected municipal officers, except those of municipalities governed by the Cree Villages and the Naskapi Village Act (chapter V-5.1) or by the Act respecting Northern villages and the Kativik Regional Government (chapter V-6.1);

(3) office staff within the meaning of Division II.2 of the Executive Power Act (chapter E-18), office staff and Members' staff within the meaning of Division III.1 of Chapter IV of the Act respecting the National Assembly (chapter A-23.1), and office staff referred to in section 114.4 of the Cities and Towns Act (chapter C-19);

(4) commissioners of school boards established under the Education Act (chapter I-13.3) and the manager and assistant manager appointed under section 4 of the Act respecting the Commission scolaire du Littoral (1966-1967, chapter 125);

(5) National Assembly personnel members and Lieutenant-Governor staff members;

(6) persons appointed or designated by the National Assembly to an office under its authority and the personnel directed by them;

(7) commissioners appointed by the Government under the Act respecting public inquiry commissions (chapter C-37) and the personnel directed by them;

(8) persons appointed by the government or by a minister to exercise an adjudicative function within the administrative branch, including arbitrators whose name appears on a list drawn up by the Minister of Labour in accordance with the Labour Code (chapter C-27);

(9) peace officers who exercise their functions mainly in Québec;

(10) physicians, dentists and midwives, when those persons are practising in a centre operated by a public institution referred to in paragraph 8 of Schedule I;

(11) persons recognized as subsidized home childcare providers under the Educational Childcare Act (chapter S-4.1.1) and the persons directed by them;

(12) directors or members of a body referred to in any of paragraphs 1 to 9 of Schedule I who receive remuneration from the body other than the reimbursement of their expenses, except persons who are elected;

(13) any other persons appointed or designated by the National Assembly, the Government or a minister, when those persons are exercising functions assigned to them by the National Assembly, the law, the Government or the minister.

Regulations and other Acts

Gouvernement du Québec

O.C. 695-2019, 26 June 2019

Amendment to Order in Council 871-2000 dated 28 June 2000 concerning the exemption from the application of certain provisions of the Highway Safety Code or of a regulation thereunder

WHEREAS the Government, by Order in Council 871-2000 dated 28 June 2000, authorized the Minister of Transport to continue to carry out or cause to be carried out on the section of Route 167 Nord, from kilometre 340 to kilometre 412 (Canton Péré to Canton Saint-Lusson), about 72 kilometres long, under subparagraph *i* of the first paragraph of section 3 of the Act respecting the Ministère des Transports (chapter M-28), all the construction, repair or maintenance work to maintain public access;

WHEREAS the Government, by Order in Council 871-2000 dated 28 June 2000, determined that, in accordance with section 5.2 of the Highway Safety Code (chapter C-24.2), the provisions of the third paragraph of section 21, the third paragraph of section 31.1, and section 54 of the Code do not apply to that section of Route 167 Nord;

WHEREAS it is expedient to amend the Order in Council so that the provisions of the Highway Safety Code or of a regulation thereunder do not apply on that section of Route 167 Nord, except for the provisions applicable to highways under the administration of or maintained by the Ministère de l'Énergie et des Ressources naturelles;

IT IS ORDERED, therefore, on the recommendation of the Minister of Transport:

THAT the third paragraph of the operative part of Order in Council 871-2000 dated 28 June 2000 be replaced by the following paragraph:

"THAT, in accordance with section 5.2 of the Highway Safety Code (chapter C-24.2), the provisions of the Code or of a regulation thereunder do not apply on that section of Route 167 Nord, except for the provisions applicable to highways under the administration of or maintained by the Ministère de l'Énergie et des Ressources naturelles";

THAT this Order in Council take effect from the date it is published in the *Gazette officielle du Québec*.

YVES OUELLET,
Clerk of the Conseil exécutif

104014

Gouvernement du Québec

O.C. 698-2019, 26 June 2019

Determination of a section of Route 167 Nord, north of Chibougamau, for construction, repair or maintenance work and certain provisions of the Highway Safety Code or of a regulation thereunder

WHEREAS the Minister of Transport extended Route 167 Nord, between kilometer 412 and kilometer 553, north of Chibougamau;

WHEREAS the section was constructed on lands in the domain of the State, under the authority and administration of the Minister of Energy and Natural Resources, and is not a highway under the jurisdiction of the Minister of Transport under the Act respecting roads (chapter V-9), which means that the provisions of that Act do no apply to the section;

WHEREAS, under subparagraph *i* of the first paragraph of section 3 of the Act respecting the Ministère des Transports (chapter M-28), the Minister of Transport must, in respect of any highway that may be determined by the Government from among the highways to which the Act respecting roads does not apply, carry out, or cause to be carried out, construction, repair or maintenance work or delegate the power to carry out such work to a local municipality that consents thereto, and ensure the financing thereof;

WHEREAS, in compliance with subparagraph *i* of the first paragraph of section 3 of that Act, it is expedient to determine that the section of Route 167 Nord, between kilometre 412 and kilometre 553, north of Chibougamau, is a highway in respect of which the Minister of Transport must carry out, or cause to be carried out, all construction, repair or maintenance work or delegate the power to carry out such work to a local municipality that consents thereto, and ensure the financing thereof;

WHEREAS the, under section 5.2 of the Highway Safety Code (chapter C-24.2), the Government may, by order in council published in the *Gazette officielle du Québec*, determine that certain provisions of the Code or of a regulation thereunder do not apply to a highway to which subparagraph *i* of the first paragraph of section 3 of the Act respecting the Ministère des Transports applies;

WHEREAS to facilitate the carrying out of mining and forest activities, it is expedient to determine that certain provisions of the Highway Safety Code or of a regulation thereunder do not apply to the section of Route 167 Nord, between kilometre 412 and kilometre 553, north of Chibougamau, except for the provisions applicable to highways under the administration of or maintained by the Minister of Energy and Natural Resources;

IT IS ORDERED, therefore, on the recommendation of the Minister of Transport and the Minister of Energy and Natural Resources:

THAT, in accordance with subparagraph *i* of the first paragraph of section 3 of the Act respecting the Ministère des Transports (chapter M-28), the section of Route 167 Nord, between kilometre 412 and kilometre 553, about 141 kilometres long, is a highway in respect of which the Minister of Transport must carry out, or cause to be carried out, all construction, repair or maintenance work or delegate the power to carry out such work to a local municipality that consents thereto, and ensure the financing thereof;

THAT the provisions of the Highway Safety Code (chapter C-24.2) or of a regulation thereunder do not apply to that section of Route 167 Nord, except the provisions applicable to highways under the administration of or maintained by the Minister of Energy and Natural Resources;

THAT this Order in Council take effect from the date of its publication in the *Gazette officielle du Québec*.

YVES OUELLET,
Clerk of the Conseil exécutif

104015

Draft Regulations

Draft Regulation

Building Act
(chapter B-1.1)

Construction Code
— Amendment

Notice is hereby given, in accordance with sections 10 and 11 of the Regulations Act (chapter R-18.1), that the Regulation to amend the Construction Code, appearing below, may be approved by the Government, with or without amendment, on the expiry of 45 days following this publication.

The draft Regulation inserts Chapter I.1, ENERGY EFFICIENCY OF BUILDINGS, in the Construction Code to incorporate by reference the 2015 edition of the National Energy Code of Canada for Buildings, to which amendments were made to meet Québec's specific needs. The draft Regulation sets out requirements for energy efficiency for the construction of new buildings or additions that are not covered by Part 11, Energy Efficiency, of the National Building Code as adopted by Chapter I of the Construction Code. The requirements concern in particular the building envelope, lighting, heating, ventilating or air-conditioning systems, service water heating and transformers and electrical motors.

The draft Regulation follows up on the commitments described in the 2013-2020 Action Plan on Climate Change. The proposed measures will result in additional construction costs estimated at $138,100,000 per year. They will however allow the operators of the buildings concerned to save about $20,200,000 per year.

Further information on the draft Regulation may be obtained by contacting Nathalie Brisson, architect, Régie du bâtiment du Québec, 800, place D'Youville, 15e étage, Québec (Québec) G1R 5S3; telephone: 418 643-1203; fax: 418 646-9280; email: nathalie.brisson@rbq.gouv.qc.ca.

Any person wishing to comment on the draft Regulation is requested to submit written comments within the 45-day period to Michel Beaudoin, President and Chief Executive Officer, Régie du bâtiment du Québec, 545, boulevard Crémazie Est, 3e étage, Montréal (Québec) H2M 2V2; email: projet.reglement.commentaires@rbq.gouv.qc.ca.

ANDRÉE LAFOREST,
Minister of Municipal Affairs and Housing

Regulation to amend the Construction Code

Building Act
(chapter B-1.1, ss. 173, 176, 176.1, 178, 179, 185, pars. 0.1, 37 and 38, and s. 192)

1. The Construction Code (chapter B-1.1, r. 2) is amended by inserting the following after Chapter I:

"**CHAPTER I.1**
ENERGY EFFICIENCY OF BUILDINGS

DIVISION I
INTERPRETATION

1.1.1. In this Chapter, unless the context indicates otherwise, "Code" means the "National Energy Code of Canada for Buildings 2015" (NRCC 56191), first printing, published by the Canadian Commission on Building and Fire Codes, National Research Council of Canada, excluding any later amendments, including errata, that may be published by that organization.

The Code is incorporated into this Chapter by reference, subject to the amendments specified in section 1.1.5.

For the purposes of this Division, the definitions set out in the Code apply, unless otherwise provided.

1.1.2. Subject to section 1.1.4, this Chapter applies to all construction work that is performed on a new building to which the Building Act (chapter B-1.1) applies and to the vicinity of that building.

It also applies to all construction work for new swimming pools or wading pools designated as facilities intended for use by the public under section 10.03.

1.1.3. Subject to section 1.1.4, this Chapter applies to the addition work of existing buildings where, after that work, the building including its addition

(1) has a building area of more than 600 m² within the meaning of the National Building Code as adopted by Chapter I of the Construction Code;

(2) has a building height of more than 3 storeys within the meaning of the National Building Code as adopted by Chapter I of the Construction Code; or

(3) does not house only dwelling units.

1.1.4. This Chapter does not apply to the construction of

(1) a building referred to in the second paragraph of section 1.04;

(2) a greenhouse;

(3) a building with a building area under 10 m² within the meaning of the National Building Code as adopted by Chapter I of the Construction Code.

DIVISION II
AMENDMENTS TO THE CODE

1.1.5. The amendments to the Code are the following:

Articles	**Amendments**
Division A Part 1	
1.1.1.1.	Replace Sentence (1) by the following: "**1)** Except as provided in Sentence (2) and as provided in sections 1.1.2 and 1.1.3 of the Construction Code (chapter B-1.1, r. 2) made under the Building Act (chapter B-1.1), this Code applies a) to the design and construction of i) all new *buildings*, and ii) all new swimming pools or wading pools designated as facilities intended for use by the public under section 10.03 of the Construction Code, and b) to *additions*. (See Note A-1.1.1.1.(1).)".
1.1.1.2.	Add the following line after "**1.1.1.2. Building Parameters Covered by this Code**: "(See Note A-1.1.1.2.)".
1.1.1.3.	Strike out the Article.
1.2.1.1.	Insert the following in Clause (b) of Sentence (1) after "applicable acceptable solutions": "and approved by the Régie du bâtiment du Québec or, in the case of *buildings* or equipment on which the Board has no jurisdiction, by the *authority having jurisdiction*".
1.4.1.2.	Replace respectively in Sentence (1) the following terms defined below: "***Airflow control area*** means a portion of a *building* to which the flow of air from the *HVAC systems* can be reduced or stopped without reducing or stopping the flow of air to other portions of the *building*."; "***Annual energy consumption*** means the annual evaluation of the energy consumption of the proposed *building* design, as calculated in accordance with the requirements of Part 8 of Division B. (See Note A-1.4.1.2.(1).)"; "***Authority having jurisdiction**** means the Régie du bâtiment du Québec, a regional county municipality or a local municipality.";

	"***Boiler**** means an *appliance*†, other than a water heater† equipped with a direct energy source, to heat a liquid or convert it into steam."; "***Dwelling unit**** means a *suite* operated as a housekeeping unit, used or intended to be used as a domicile by one or more persons and usually containing cooking, eating, living, sleeping and sanitary facilities."; "***Floor surface area*** means the area of a space or group of spaces measured from the exterior surface of the perimeter walls, by the axis of party walls and *partitions* and the virtual separation between interconnected spaces, at or near floor level, including the area occupied by columns, interior walls and openings in the floor."; "***Interior lighting*** means lighting installed in unconditioned or *conditioned spaces* that are sheltered from the outdoor environment and intended to light only those spaces, except for lighting at exterior entrances and exterior exits. (See Note A-1.4.1.2.(1).)"; "***Interior lighting power allowance*** means lighting power allocated to illuminate the interior of a space or group of spaces."; "***Partition*** means an interior wall one *storey* or part-*storey* in height."; "***Primary system*** means the combination of equipment working as a system that ensures ventilation or converts electricity or fuel to heating or cooling and may distribute it to one or more *secondary systems* (e.g. *boilers* and chillers), where such equipment is not already defined as part of the *secondary system*."; "***Secondary system*** means a system that directly provides ventilating, heating and cooling to a *temperature-control zone* (e.g. fan system). *Secondary systems* may include equipment that converts electricity or fuel to heating or cooling (e.g. *unit heater*) and terminal devices or auxiliaries (e.g. electric baseboard heaters)."; "***Service water*** means the drinking water for plumbing systems covered by the NPC."; "***Suite**** means a single room or series of rooms of complementary use, operated under a single tenancy, and includes *dwelling units,* individual guest rooms in motels and hotels, boarding houses, rooming houses and dormitories, single-family homes, as well as individual stores and individual or complementary rooms for *business and personal services occupancies*†.(See Note A-1.4.1.2.(1).)"; "***Supply air handler*** means that part of an *HVAC system* that conditions return air and/or outdoor air and delivers it to the *supply ducts*."; "***Thermal block*** means a space or group of spaces that is considered as one homogeneous space for energy modeling purposes. A *thermal block* shall be: a) one *temperature-control zone,* b) a group of *temperature-control zones* i) that are served by the same *HVAC system* or by *HVAC systems* considered to be identical, ii) that are operated according to the same schedule and controlled on the same temperature and moisture setpoint, iii) whose function and envelope characteristics are sufficiently similar that the heating and cooling energy consumption obtained by modeling the group of zones as a *thermal block* is not significantly different from what would be obtained by summing the results for the individual zones modeled separately, and iv) whose azimut of the glazed exterior facades of the group of *temperature-control zones* varies by no more than 45°, or

c) a zone consisting entirely of *conditioned spaces* that are indirectly heated, cooled or ventilated.

(See Note A-1.4.1.2.)".

Insert "(See Note A-1.4.1.2.(1).)" after "*interior lighting*" in the defined term "***Exterior lighting***" in Sentence (1);

Insert "glazed sections of curtain walls," after "*skylights*" in the defined term "***Fenestration***" in Sentence (1);

Insert the following defined terms in alphabetical order:

"***Effective thermal resistance [RSI$_E$ value]*** means the inverse of the *overall thermal transmittance*. The RSI$_E$ value shall be calculated,

a) for *opaque building assemblies*, according to Sentence 3.1.1.5.(5) and Article 3.1.1.7., and

b) for opaque sections of curtain walls, according to Sentence 3.1.1.5.(6).";

"***HVAC system*** means a heating, ventilating or air-conditioning system comprising all the equipment and ducts serving a *building* or part of a *building*. It includes a *primary system*, a *secondary system* or a combination of at least one *primary system* and at least one *secondary system*.";

"***Interior lighting power allowance*** means the maximum lighting power allowance to be provided to illuminate the interior of a *suite*, a group of *suites* or a *building*.";

"***Linear thermal transmittance (Ψ)*** means the rate, in W/(m·°C), at which heat is transferred per unit of length through a building assembly resulting from a steady-state temperature difference. (See Note A-1.4.1.2.(1).)";

"***Point thermal transmittance (χ)*** means the rate, in W/°C, of heat transfer by point penetration through a building assembly that is subject to a steady-state temperature difference. (See Note A-1.4.1.2.(1).)".

Strike out the following defined terms in Sentence (1):

"***Assembly occupancy****";

"***Building height* (in storeys)***";

"***Enclosed space***";

"***Exterior entrance***";

"***Exterior exit***";

"***Grade****";

"***Gross lighted area***";

"***Occupancy****";

	"***Repair garage****" "***Theatre****"; "***Toplighting***"; Strike out "in watts," in the defined term "***Installed interior lighting power***" in Sentence (1).
1.4.2.1.	Insert the following symbols and other abbreviations in alphabetical order in Sentence (1): "HDD..... heating degree-days under 18ºC"; "IILE ..... installed *interior lighting* energy"; "ILEA..... *interior lighting* energy allowance"; Replace the meaning of "HVAC" by the following: "HVAC..... heating, ventilating or air-conditioning"; Strike out the following symbols and other abbreviations in Sentence (1): "gpm..... gallon(s) per minute"; "US gal. ..... US gallon(s)"; "USGPM..... US gallon(s) per minute".
Division A Part 1 Schedule A	
A-1.1.1.1.(1)	Add the following at the end of the first paragraph: "This Code constitutes the energy component of the Construction Code (chapter B-1.1, r. 2). It does not cover the operation of the building. Buildings that are part of the application of Part 11 of Division B of the NBC, as defined in Sentence 1.3.3.1.(3) of Division A of the NBC, are not covered by this Code.".
	Add the following Note: "**A-1.1.1.2. Building Parameters.** The construction and design parameters used to establish compliance with this Code must represent the anticipated operating conditions of the building. The rentable areas that were not defined when preparing the plans and specifications and constructing the building are not exempted from the requirements of this Code.".
A-1.2.1.1.(1)(b)	Replace ""alternative solution."" in the Note concerning "**Code Compliance via Alternative Solutions**" by the following: ""alternative solution" and be approved by the Régie du bâtiment du Québec according to the conditions it determines in accordance with section 127 of the Building Act (chapter B-1.1) or, in the case of buildings or equipment on which the Board has no jurisdiction, by the authority having jurisdiction."; —

	Strike out the following at the end of the Note concerning "**Code Compliance via Alternative Solutions**": ", i.e. the consequence remaining once the applicable acceptable solutions in Division B have been implemented represents the residual consequence deemed to be acceptable by the broad base of Canadians who have taken part in the consensus process used to develop the Code".
A-1.4.1.2.(1)	Replace the Note concerning the defined term "**Interior Lighting**" by the following: "**Interior Lighting** Completely glazed market stalls and vestibules are examples of interior spaces that are sheltered from the exterior environment and not necessarily conditioned where the interior lighting is intended only to illuminate that space. The illumination of the covered portion of a parking area may be considered interior lighting. The illumination of the non-covered portion of a parking area, such as the open air last storey of a multi-storey parking garage may be considered exterior lighting. The illumination of a covered exterior walkway may be considered exterior lighting."; --- Add the following after the Note concerning the defined term "**Building Envelope Application**": "**Annual Energy Consumption** Fuel consumption is generally calculated by the programs in terms of volume. In such a case, the consumption must be converted in terms of energy. **Exterior Lighting** Exterior lighting includes in particular lighting of exterior advertising signage and exterior parking areas. **Linear Thermal Transmittance** The coefficient makes it possible to express the influence of the linear thermal bridging over the total heat losses of part of the envelope of a building. **Point Thermal Transmittance** The coefficient makes it possible to express the influence of a point thermal bridging over the total heat losses of part of the envelope of a building. **Thermal Block** Where multiple control zones have windows on more than one facade of the building, they may be considered a thermal block only under certain conditions. Grouping zones that have fenestration in a single thermal block is permitted only where the zones have similar azimuts, that is, less than 45° from one another. It is also possible that multiple azimuts of a same zone have an exterior fenestration, such as an office in the northeastern corner of an office tower. In that case, only one thermal block could be formed with all the offices of the intermediate storeys of the northeastern corner."; --- Add the following at the end of the Note: "**Secondary system** Secondary systems may include specific equipment that converts electricity or fuel to heating or cooling energy for the temperature-control zone. Secondary systems may also include terminal devices and auxiliaries."; --- Strike out the Note concerning the defined term "**Gross Lighted Area**".

Division B Part 1	
1.2.1.2.	Strike out Sentence (2).
1.3.1.2.	Replace the documents concerned by the following in Table 1.3.1.2.: “AAMA 501.5-07 Thermal Cycling of Exterior Walls 3.1.1.8.(3)”; “AHRI 1061 (SI)-2013 Performance Rating of Air-to-Air Exchangers for Energy Recovery Ventilation Equipment 5.2.10.1.(5) 5.2.10.4.(2)”; “ASHRAE 2013 ASHRAE Handbook – Fundamentals 3.1.1.5.(4) A-3.1.1.5.(5)(a) and (b) A-3.1.1.5.(5)(c), (6)(c) and (7)(a) A-3.3.1.3.(2) A-8.4.3.3.(7) and (8)”; “ASHRAE ASHRAE/IES 90.1-2013 User’s Manual A-6.2.3.1.(1) and (5) and 6.2.3.2.(1) A-8.4.4.6.(4)”; “ASHRAE ASHRAE/IES 140-2011 Evaluation of Building Energy Analysis Computer Programs 8.4.2.2.(1) A-8.4.2.2.(1)”; “ASTM C 1363-11

	Thermal Performance of Building Materials and Envelope Assemblies by Means of a Hot Box Apparatus 3.1.1.5.(4) 3.1.1.5.(5) 3.1.1.5.(7)"; "ASTM E 283-04 Determining Rate of Air Leakage Through Exterior Windows, Curtain Walls, and Doors Under Specified Pressure Differences Across the Specimen 3.1.1.8.(3) 3.1.1.8.(4)"; "ASTM E 2357-11 Determining Air Leakage of Air Barrier Assemblies 3.1.1.8.(1) A-3.1.1.8.(1)"; "CCBFC – National Building Code, as adopted by Chapter I of the Construction Code (chapter B-1.1, r. 2) 1.1.1.3.(1)(3) 1.1.1.3.(2)(3) 1.4.1.2.(1)(3) 3.1.1.5.(1) 5.2.1.1.(1) 5.2.2.1.(1) 5.2.2.8.(2) 5.2.5.1.(1) 5.2.8.8.(4) 5.2.8.8.(5) 5.2.10.2.(2) 8.4.3.6.(1) Table 8.4.4.7.-B Table 8.4.4.7.-C Table 8.4.4.7.-D Table 8.4.4.7.-E 8.4.4.15.(2) 8.4.4.17.(4) 8.4.4.17.(5) A-1.1.1.1.(1)(3) A-3.2.1.1.(1)(3)

	A-3.2.3.1.(3) A-5.2.2.8.(2) A-5.2.8.3.(1)"; "CCBFC – National Fire Code, as adopted by Chapter VIII of the Safety Code (chapter B-1.1, r. 3) 1.4.1.2.(1)[(3)] A-3.2.1.1.(1)[(3)]"; "CCBFC – National Plumbing Code, as adopted by Chapter III of the Construction Code (chapter B-1.1, r. 2) 1.4.1.2.(1)[(3)] A-3.2.1.1.(1)[(3)]"; "CSA AAMA/WDMA/CSA 101/I.S.2/A440-11 NAFS – North American Fenestration Standard/Specification for Windows, Doors, and Skylights 3.1.1.5.(3) 3.1.1.8.(2) 3.1.1.8.(4)"; "CSA CAN/CSA-A440.2-14/A440.3-14 Fenestration Energy Performance/User Guide to CSA A440.2-14, Fenestration Energy Performance 3.1.1.5.(3) 3.1.1.5.(6) A-3.1.1.6.(3)"; "CSA CAN/CSA-C439-09 Rating the Performance of Heat/Energy-Recovery Ventilators 5.2.10.1.(5) 5.2.10.4.(2) A-5.2.10.4.(2)(b)"; "IES ANSI/IES RP-28-07 Lighting and the Visual Environment for Senior Living

	Table 4.2.1.6. Table 8.4.3.4.-A Table A-8.4.3.8.(1)-A Table A-8.4.3.8.(2)-B"; "NFRC 100-2010 Determining Fenestration Product U-factors 3.1.1.5.(3) 3.1.1.5.(6)"; "SMACNA ANSI/SMACNA 006-2006 HVAC Duct Construction Standards – Metal and Flexible 5.2.2.3.(1) A-5.2.2.1.(1) A-5.2.2.3.(1)"; "ULC CAN/ULC-S742-11 Air Barrier Assemblies – Specification 3.1.1.8.(1) A-3.1.1.8.(1)"; Insert the following documents in Table 1.3.1.2., in order of the organizations: "CSA A440S1-09 Canadian supplement to AAMA/WDMA/CSA 101/I.S.2/A440-08, North American Fenestration Standard (NAFS)/Specification for Windows, Doors and Skylights 3.1.1.8.(2) 3.1.1.8.(4)"; "ISO ISO 6946:2007 Building components and building elements – Thermal resistance and thermal transmittance – Calculation method 3.1.1.5.(5) A-3.1.1.5.(5)(a) and (b)"; "UL UL 181A-2013 Closure Systems for Use with Rigid Air Ducts 5.2.2.3.(5)";

	"UL UL 181B-2013 Closure Systems for Use with Flexible Air Ducts and Air Connectors 5.2.2.3.(5)";
	Strike out the following documents in Table 1.3.1.2.: "AAMA 501.5-07 Thermal Cycling of Exterior Walls 3.2.4.3.(2)"; "AHRI ANSI/AHRI 210/240-2008 Performance Rating of Unitary Air-Conditioning and Air-Source Heat Pump Equipment Table 5.2.12.1."; "AHRI AHRI 310/380-2014/CSA C744-14 Packaged Terminal Air-Conditioners and Heat Pumps Table 5.2.12.1."; "AHRI ANSI/AHRI 340/360-2007 Performance Rating of Commercial and Industrial Unitary Air-Conditioning and Heat Pump Equipment Table 5.2.12.1."; "AHRI ANSI/AHRI 366 (SI)-2009 Performance Rating of Commercial and Industrial Unitary Air-Conditioning Condensing Units Table 5.2.12.1."; "AHRI ANSI/AHRI 390-2003 Performance Rating of Single Package Vertical Air-Conditioners and Heat Pumps Table 5.2.12.1."; "AHRI ANSI/AHRI 460-2005 Performance Rating of Remote Mechanical-Draft Air-Cooled Refrigerant Condensers Table 5.2.12.2.";

	“ANSI/CSA ANSI Z21.10.3-2013/CSA 4.3-2013 Gas-Fired Water Heaters, Volume III, Storage Water Heaters With Input Ratings Above 75,000 Btu Per Hour, Circulating and Instantaneous Table 6.2.2.1.”; “ANSI/CSA ANSI Z21.13-2014/CSA 4.9-2014 Gas-Fired Low Pressure Steam and Hot Water Boilers Table 5.2.12.1.”; “ANSI/CSA ANSI Z21.56-2013/CSA 4.7-2013 Gas-Fired Pool Heaters Table 6.2.2.1.” “ANSI/CSA ANSI Z83.8-2013/CSA 2.6-2013 Gas Unit Heaters, Gas Packaged Heaters, Gas Utility Heaters and Gas-Fired Duct Furnaces Table 5.2.12.1.”; “ASHRAE 2011 ASHRAE Handbook – HVAC Applications A-6.2.4.1.(1)”; “ASHRAE ANSI/ASHRAE 62.1-2007 Ventilation for Acceptable Indoor Air Quality A-5.2.3.4.(1)” “ASHRAE ANSI/ASHRAE/IES 90.1-2013 Energy Standard for Buildings Except Low-Rise Residential Buildings A-Table 3.2.2.2. A-5.2.10.1.(1)”; “ASHRAE ANSI/ASHRAE 127-2012 Rating Computer and Data Processing Room Unitary Air-Conditioners Table 5.2.12.1.”;

	“ASME PTC 4-2013 Fired Steam Generators Table 5.2.12.1.”; “ASME/CSA ASME A112.18.1-2012/CSA B125.1-12 Plumbing Supply Fittings 6.2.6.1.(1) 6.2.6.2.(1)”; “CSA CAN/CSA-B140.4-04 Oil-Fired Warm Air Furnaces Table 5.2.12.1.”; “CSA CAN/CSA-B211-00 Energy Efficiency of Oil-Fired Storage Tank Water Heaters Table 6.2.2.1.”; “CSA C22.1-12 Canadian Electrical Code, Part I A-7.2.1.1.”; “CSA CAN/CSA-C191-04 Performance of Electric Storage Tank Water Heaters for Domestic Hot Water Service Table 6.2.2.1.”; “CSA C368.1-14 Energy Performance of Room Air Conditioners Table 5.2.12.1.”; “CSA C390-10 Test Methods, Marking Requirements, and Energy Efficiency Levels for Three-Phase Induction Motors 7.2.4.1.(1)”; “CSA

	C654-14 Fluorescent Lamp Ballast Efficacy Measurements 4.2.1.2.(1) and (2)”; “CSA C656-14 Split-System and Single-Package Air Conditioners and Heat Pumps Table 5.2.12.1.”; “CSA CAN/CSA-C743-09 Rating Packaged Water Chillers Table 5.2.12.1.”; “CSA CAN/CSA-C745-03 Energy Efficiency of Electric Storage Tank Water Heaters and Heat Pump Water Heaters Table 6.2.2.1.”; “CSA CAN/CSA-C746-06 Rating Large and Single Packaged Vertical Air Conditioners and Heat Pumps Table 5.2.12.1.”; “CSA C748-13 Direct-Expansion (DX) Ground-Source Heat Pumps Table 5.2.12.1.”; “CSA C802.1-13 Minimum Efficiency Values for Liquid-Filled Distribution Transformers 7.2.3.1.(1)”; “CSA C802.2-12 Minimum Efficiency Values for Dry-Type Transformers 7.2.3.1.(1)”; “CSA CAN/CSA-C802.3-01 Maximum Losses for Power Transformers

	7.2.3.1.(1)"; "CSA C828-13 Thermostats Used with Individual Room Electric Space Heating Devices 5.2.8.5.(4)"; "CSA CAN/CSA-C860-11 Internally Lighted Exit Signs 4.2.1.1.(1)"; "CSA C873.4-14 Building Energy Estimation Methodology – Part 4 – Energy Consumption for Lighting 4.3.1.3.(1) to (5)"; "CSA CAN/CSA-C13256-1-01 Water-Source Heat Pumps - Testing and Rating for Performance - Part 1: Water-to-Air and Brine-to-Air Heat Pumps (Adopted ISO 13256-1:1998, with Canadian Deviations) Table 5.2.12.1." "CSA CAN/CSA-F379 SERIES-09 (excluding Supplement F379S1-11) Packaged Solar Domestic Hot Water Systems (Liquid-to-Liquid Heat Transfer) 6.2.2.3.(1)"; "CSA P.2-13 Measuring the Annual Fuel Utilization Efficiency of Residential Gas-Fired or Oil-Fired Furnaces and Boilers Table 5.2.12.1."; "CSA CAN/CSA-P.3-04 Measuring Energy Consumption and Determining Efficiencies of Gas-Fired Storage Water Heaters Table 6.2.2.1."; "CSA CAN/CSA-P.7-10 Measuring Energy Loss of Gas-Fired Instantaneous Water Heaters

	Table 6.2.2.1."; "CSA CAN/CSA-P.8-09 Thermal Efficiencies of Industrial and Commercial Gas-Fired Package Furnaces Table 5.2.12.1."; "CTI ATC-105-00 Acceptance Test Code Table 5.2.12.2."; "CTI ATC-106-11 Acceptance Test Code for Mechanical Draft Evaporative Vapor Condensers Table 5.2.12.2."; "CTI STD-201OM-11 Thermal Performance Certification of Evaporative Heat Rejection Equipment Table 5.2.12.1."; "CTI STD-2011 Thermal Certification of Cooling Towers Table 5.2.12.2."; "DOE 10 CFR, Part 430-2011 Energy, Energy Conservation Program for Consumer Products Table 6.2.2.1."; "IES 10th Edition The Lighting Handbook A-Table 4.3.2.8."; "NEMA ANSI_ANSLG C82.11:2011 American National Standard for Lamp Ballasts–High-Frequency Fluorescent Lamp Ballasts 4.2.1.2.(2)";

	“NRCan SOR/94-651-2013 Energy Efficiency Act and its Regulations Table 5.2.12.1. 5.2.12.4.(1) Table 6.2.2.1. 6.2.2.4.(2) 6.2.2.5.(1) A-5.2.12.1.(1) and 6.2.2.1.(1)”; “TIAC 2013 Mechanical Insulation Best Practices Guide A-5.2.2.5.(7) and 5.2.5.3.(7)”.
1.3.2.1.	Replace respectively the meaning of the following abbreviations in Sentence (1): “NBC .....National Building Code”; “NFC ..... National Fire Code”; “NPC .....National Plumbing Code”; Insert the following abbreviation, in alphabetical order, in Sentence (1): “UL ..... Underwriters Laboratory (www.ul.com)”; Strike out the following in Sentence (1): “NEMA ..... National Electrical Manufacturers Association (www.nema.org)”.

Division B
Part 1
Schedule A

A-1.1.2.1.

Replace Figure A-1.1.2.1. by the following:

“

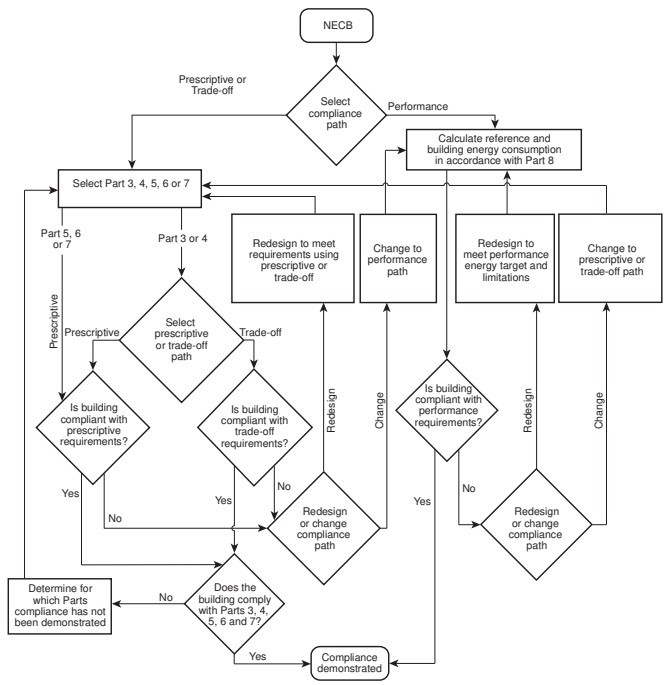

Figure A-1.1.2.1.

Decision flow chart for Code compliance”;

Strike out “and/or vary the fenestration and door area” after “more components of the building envelope” in the Note concerning “**Trade-off Path**”;

Add the following at the end of the Note concerning “**Trade-off Path**”:

“The building energy performance compliance path used to achieve compliance of buildings is an approach that applies to the whole building. Therefore, if that path is chosen to achieve compliance, it must be the only path used for all the parameters of the building. It should be noted that certain building parameters may not be amended in that path in respect of prescriptive requirements. Those restrictions are specified in Sections 3.4., 4.4., 5.4., 6.4. and 7.4., and in Part 8.”.

Division B Part 3	
3.1.1.2.	Replace Sentence (1) by the following: "**1)** This Part applies to the *building envelope* in *buildings* and parts of a *building* a) that are equipped with *HVAC systems* or have provisions for the future installation of such systems, and b) whose heating and/or cooling system output capacity is at least 10 W/m^2. (See Note A-3.1.1.2.(1)(b).)".
3.1.1.5.	Strike out "(See Note A-3.1.1.5.)" after the heading of the Article; --- Replace Sentence (3) by the following: "**3)** Except as provided in Sentence (4), the *overall thermal transmittance* of *fenestration* and doors shall be determined for the reference sizes listed in accordance with a) CAN/CSA-A440.2/A440.3, "Fenestration Energy Performance/User Guide to CSA A440.2-14, Fenestration Energy Performance," b) NFRC 100, "Determining Fenestration Product U-factors," or c) AAMA/WDMA/CSA 101/I.S.2/A440-11, "NAFS – North American Fenestration Standard/Specification for windows, doors, and skylights.""; --- Replace Sentence (5) by the following: "**5)** The *effective thermal resistance* characteristics of *building* assemblies other than *fenestration*, doors and opaque sections of curtain walls shall be determined in accordance with a) the simplified calculation method described in Section 6.2 of ISO 6946, "Building components and building elements -- Thermal resistance and thermal transmittance -- Calculation methods" (see Note A-3.1.1.5.(5)(a) and (b)), b) a method calculating the *effective thermal resistance* of building assemblies i) with a discontinuity at the expanses of insulation, and ii) whose thermal conductivity difference between the materials contributing to the discontinuity is moderate, so that the heat transferred from the structural members is parallel to that of the insulation (see Note A-3.1.1.5.(5)(a) and (b)), c) the heat transfer digital simulations (see Note A-3.1.1.5.(5)(c), (6)(c) and (7)(a)), or d) laboratory tests performed in accordance with ASTM C 1363, "Thermal Performance of Building Materials and Envelope Assemblies by Means of a Hot Box Apparatus," using an indoor air temperature of 21±1°C and an outdoor air temperature of -18±1°C. **6)** Except as provided in Sentences 3.3.1.3.(4) and 8.4.3.3.(8), the *effective thermal resistance* of the opaque sections of curtain walls shall be determined in accordance with a) CAN/CSA-A440.2/A440.3, "Fenestration Energy Performance/User Guide to CSA A440.2-14, Fenestration Energy Performance," b) NFRC 100, "Determining Fenestration Product U-factors," or

	c) the heat transfer digital simulations (see Note A-3.1.1.5.(5)(c), (6)(c) and (7)(a)). **7)** The *linear thermal transmittance* and the *point thermal transmittance* shall be determined from a) the heat transfer digital simulations (see Note A-3.1.1.5.(5)(c), (6)(c) and (7)(a)), or b) laboratory tests performed in accordance with ASTM C 1363, "Thermal Performance of Building Materials and Envelope Assemblies by Means of a Hot Box Apparatus," using an indoor air temperature of 21±1°C and an outdoor air temperature of -18±1°C".
3.1.1.6.	Replace the Article by the following: "**3.1.1.6. Characteristics and Calculation of Surface Areas** **1)** *Opaque building assemblies* areas shall be calculated along the plane of the insulation using dimensions measured to the exterior walls of adjacent building assemblies, and include the area of the intersection surfaces of the interior building assemblies. (See Note A-3.1.1.6.(1).) **2)** Wall assemblies inclined less than 60° from the horizontal shall be considered as roof assemblies, and roof assemblies inclined 60° or more from the horizontal shall be considered as wall assemblies. **3)** *Fenestration* and door areas shall be calculated to the rough opening in the *opaque building assemblies*. (See Note A-3.1.1.6.(3).) **4)** *Fenestration* and door areas integrated to curtain walls shall be calculated from the axis of any mullion separating the *fenestration* or doors from the opaque sections of curtain walls. **5)** The *fenestration* area made of flat panes that are not all in the same plane or curved panes shall be measured along the surface of the glass. (See Note A-3.1.1.6.(5).) **6)** In the calculation of allowable door and *fenestration* area, excluding *skylight* areas, the gross wall area shall be calculated as the sum of the areas of all above-ground wall assemblies including *fenestration* and doors, but not including parapets, projected fins, ornamentation and appendages. **7)** In the calculation of allowable *skylight* area, the gross roof area shall be calculated as the sum of the areas of insulated roof including *skylights*. **8)** In the calculation of allowable door and *fenestration* area in *additions*, *additions* shall be considered as new *buildings*.".
3.1.1.7.	Replace the Article by the following: "**3.1.1.7. Calculation of Effective Thermal Resistance** **1)** The calculation of the *effective thermal resistance* of *opaque building assemblies* shall account for the specific thermal resistance of a) continuous members, b) repetitive structural members, such as studs and joists, jambs and resilient bars, and c) ancillary structural members, such as lintels, sills and plates. (See Note A-3.1.1.7.(1).) **2)** In calculating the *effective thermal resistance* of *opaque building assemblies*, the thermal bridging effect of major structural members, such as columns and spandrel beams, that are parallel to the plane of the *building envelope* and partly penetrate that *building envelope* assembly need not be taken into account, provided they do not reduce the *effective thermal resistance* at the projected area at less than half the value required by Section 3.2. (See Note A-3.1.1.7.(2).)

	3) In calculating the *effective thermal resistance* of *opaque building assemblies*, the following elements need not be taken into account when they must partially or completely penetrate the *building envelope* to perform their intended function and comply with the requirements of Article 3.2.1.2.: a) pipes, b) ducts, c) equipment with through-the-wall venting, d) equipment of an *HVAC system*, e) minor ties and anchors, and any other similar member, necessary to the structure of the envelope, f) linear anchoring devices, such as shelf angles for masonry, and g) major structural penetrations, such as balcony slabs, beams, girders, columns, ornamentation and appendages. (See Note A-3.1.1.7.(3).) **4)** Where a component of the *building envelope* is protected by an enclosed space other than a conditioned space, such as a sun porch, enclosed veranda or vestibule, the enclosure may be considered to have an *effective thermal resistance* of 0.16 $m^2 \cdot °C/W$. (See Note A-3.1.1.7.(4).) **5)** In calculating the *effective thermal resistance* of an *opaque building assembly*, the effect of overlapping expanses of insulation, on either side of a building assembly, does not have to be taken into account where they comply with the requirements of Article 3.2.1.2. **6)** In calculating the *effective thermal resistance* of an *opaque building assembly*, the effect of the transitions between the constructive systems of the *building envelope*, such as joints between walls and fenestration, does not have to be taken into account where they comply with the requirements of Article 3.2.1.2.”.
	Add the following Article: “**3.1.1.8. Air Leakage in Building Assemblies** **1)** *Air barrier assemblies* in *opaque building assemblies* excluding the opaque sections of curtain walls shall be assessed in accordance with a) CAN/ULC-S742, “Air Barrier Assemblies – Specification,” or b) ASTM E 2357, “Determining Air Leakage of Air Barrier Assemblies,” provided that i) the *building* is erected in an area where it will be submitted to extended wind pressures having a probability of 1 out of 50 to be exceeded during one year by not more than 0.65 kPa, and ii) the *air barrier assembly* is installed inboard of the *building envelope* of the thermal insulation of the *opaque building assembly*. (See Note A-3.1.1.8.(1).) **2)** Except for Sentence (3), the air leakage rates of the *fenestration* excluding the glazed sections of curtain walls shall be assessed in accordance with a) AAMA/WDMA/CSA 101/I.S.2/A440-11, “NAFS – North American Fenestration Standard/Specification for windows, doors, and skylights,” and b) CSA A440S1, “Canadian Supplement to AAMA/WDMA/CSA 101/I.S.2/A440-08, NAFS – North American Fenestration Standard/Specification for windows, doors, and skylights.” **3)** Air leakage rates of curtain walls forming part of the *building envelope* shall be assessed in accordance with ASTM E 283, “Standard Test Method for Determining Rate of Air Leakage Through Exterior Windows, Curtain Walls, and Doors Under Specified Pressure Differences Across the Specimen,” when the

	specimen is prepared in accordance with Clause 6 of AAMA 501.5, “Thermal Cycling of Exterior Walls.” **4)** Air leakage rates of doors forming part of the *building envelope* shall be assessed in accordance with a) ASTM E 283, “Standard Test Method for Determining Rate of Air Leakage Through Exterior Windows, Curtain Walls, and Doors Under Specified Pressure Differences Across the Specimen,” or b) the following standards: i) AAMA/WDMA/CSA 101/I.S.2/A440, “NAFS – North American Fenestration Standard/Specification for windows, doors, and skylights,” and ii) CSA A440S1, “Canadian Supplement to AAMA/WDMA/CSA 101/I.S.2/A440-08, NAFS – North American Fenestration Standard/Specification for windows, doors, and skylights.””.
3.2.1.1.	Replace “increasing the *overall thermal transmittance*” in Sentence (1) by “reducing the thermal resistance”. ——— Replace “the *overall thermal transmittance*” in Sentence (2) by “the thermal resistance”.
3.2.1.2.	Replace the Article by the following: “**3.2.1.2. Continuity of Insulation** **1)** Except as provided in Sentences (2) to (7) and (9), interior building assemblies, including *partitions* and major structural members that are embedded along exterior walls that partly penetrate the *building envelope* a) shall not break the continuity of the insulation, and b) shall have an *effective thermal resistance* at their projected area equal to at least the resistance required for the *building envelope*. (See Note A-3.2.1.2.(1).) **2)** The following members need not be taken into account to comply with Sentence (1): a) repetitive structural members, such as studs and joists, jambs and resilient bars, b) ancillary structural members, such as lintels, sills and plates, and c) minor penetrations of the envelope, such as ties. (See Note A-3.2.1.2.(2).) **3)** Except as provided in Sentences (4), (9) and (10), where an interior wall, foundation wall, *firewall*, party wall, structural member, ornementation or appendage penetrates the *building envelope* and breaks the continuity of its insulation, it shall a) be insulated i) on its faces exposed to air inward or outward from the *building envelope* for a distance equal to 4 times its uninsulated thickness, and ii) so that the *effective thermal resistance* of the penetrating member is not, for the distance prescribed by Clause (i), less than that required for the penetrated component, or b) be insulated in continuity with the insulation of the penetrated component so that the *effective thermal resistance* at that location is equal to at least half the resistance required for the penetrated component.

	(See Note A-3.2.1.2.(3).) **4)** Where a structural slab penetrates the *building envelope* and breaks the continuity of the insulation, the slab shall be insulated a) in accordance with the requirements of Sentence (3), or b) with materials having a thermal resistance of at least i) 1.76 m²·°C/W installed on the axis of the expanse of insulation of the penetrated wall for a distance of at least 2/3 of the penetration area, and ii) 0.09 m²·°C/W installed above and under the slab inward for a distance equal to at least 4 times the thickness of the slab. (See Note A-3.2.1.2.(4).) **5)** Linear anchoring devices, shelf angles for masonry and other similar devices that penetrate the insulation of a component of the *building envelope* shall include intermittent transverse supports so that only the latter penetrate the insulation. (See Note A-3.2.1.2.(5).) **6)** Joints between building assemblies of the *building envelope*, such as expansion or construction joints and joints between walls and doors or *fenestration,* shall be insulated a) in a manner that provides continuity across such joints, and b) in a manner that the *effective thermal resistance* at the location of those joints is equal to at least half of the lowest of the values required for the contiguous building assemblies. (See Note A-3.2.1.2.(6).) **7)** Except as provided in Clause (9)(e), where 2 expanses of insulation are separated by a member of the *building envelope* and do not intersect, those expanses of insulation shall overlap for a distance equal to at least 4 times the thickness of the assembly separating them. (See Note A-3.2.1.2.(7).) **8)** To comply with Sentence (7), hollow-core masonry walls shall be filled with grout, mortar or insulation at the location coinciding with the limits of the overlapped expanses of insulation. (See Note A-3.2.1.2.(8).) **9)** The continuity of the insulation may be broken a) between a foundation wall and a floor slab in contact with the ground where the foundation wall is insulated from the exterior, b) the horizontal part of a foundation wall supporting an exterior screen-wall where it is insulated from the exterior, c) at minor transitions between the constructive systems of the *building envelope* that must break the continuity of the insulation to perform their intended function, such as backing necessary for fastening flashing at the intersection of parapets and roofs (see Note A-3.2.1.2.(9)(c)), d) where ducts or devices penetrate expanses of insulation of the *building envelope*, provided that the insulation is installed to follow closely the perimeter of those elements, or e) where the 2 expanses of insulation may not be extended for the distance required by Sentence (7), provided that the *effective thermal resistance* of the member of the *building envelope* is equal to at least half the minimum value required for that member at the location of the discontinuity of the insulation. **10)** A thermal bridging breaker part of a point penetration of the *building envelope* need not be insulated in accordance with the requirements of Sentence (3) where all the components of the point penetration have a *point thermal transmittance* of not more than 0.5 W/°C.”.

3.2.1.3.	Replace the Article by the following: "**3.2.1.3. Spaces Heated or Cooled to Different Temperatures** **1)** The *effective thermal transmittance,* RSI_{E1}, in m²·°C/W, of building assemblies separating *conditioned spaces* that are intended to be heated or cooled to temperatures that differ by more than 10°C shall be equal to at least the value obtained with the following equation: $$RSI_{E1} = [(t_2 - t_1) \cdot RSI_E]/43$$ where t_2 = indoor design temperature of the warmer *conditioned space,* in °C, t_1 = indoor design temperature of the colder *conditioned space,* in °C, and RSI_E = *effective thermal resistance* of 3.60 m²·°C/W for a wall and 5.46 m²·°C/W for a floor. (See Note A-3.2.1.3.(1).) **2)** The building assemblies covered in Articles 3.2.2.2., 3.2.2.3., 3.2.2.4. and 3.2.3.1. insulating a heated but not cooled space whose heating setpoint is less than 18°C, shall have an *effective thermal resistance*, RSI_{E1}, in m²·°C/W, equal to at least the value obtained with the following equation: $$RSI_{E1} = [(t_1 - t_0) \cdot RSI_E]/(18 - t_0)$$ where t_1 = heating setpoint in winter months, in °C, t_0 = outdoor 2.5% January heating design temperature according to the location of the *building* determined in accordance with Sentence 1.1.4.1.(1), in °C, and RSI_E = *effective thermal resistance* required in Tables 3.2.2.2., 3.2.2.3., 3.2.2.4. and 3.2.3.1., in m²·°C/W. (See Note A-3.2.1.3.(2).)".
3.2.1.4.	Replace the Article by the following: "**3.2.1.4. Allowable Fenestration and Door Area** **1)** The total area of doors and *fenestration*, excluding the *skylight* area, shall be equal to or less than 40% of the gross wall area determined in accordance with Article 3.1.1.6. **2)** The total *skylight* area shall be less than 3% of the gross roof area as determined in Article 3.1.1.6. **3)** The *overall thermal transmittance* of the *fenestration* and doors of an *addition* whose *floor area* is less than 200 m² and whose *fenestration* or door area exceeds the requirements of Sentence (1) or (2) shall comply with the requirements of Sentences 3.2.2.3.(3) and 3.2.2.4.(2).".
3.2.2.1.	Strike out Clause (3)(g).
3.2.2.2.	Replace the Article by the following: "**3.2.2.2. Thermal Characteristics of Above-ground Opaque Building Assemblies** **1)** Except as provided in Sentences (2), (4), (5) and (6) and Article 3.2.1.3., the *effective thermal resistance* of above-ground *opaque building assemblies* shall be equal to at least that shown in Table 3.2.2.2. for the *building* or part thereof

enclosed by the *opaque building assembly,* for the applicable heating-degree-day category taken at 18°C. (See Note A-3.2.2.2.(1).)

Table 3.2.2.2.
Effective Thermal Resistance of Above-ground Opaque Building Assemblies
Forming Part of Sentences 3.2.2.2.(1) and (2)

Above-ground *Opaque Building Assembly*	Heating Degree-Days under 18°C of *Building* Location,[1] in Celsius Degree-Days					
	Zone 4: < 3000	Zone 5: 3000 to 3999	Zone 6: 4000 to 4999	Zone 7A: 5000 to 5999	Zone 7B: 6000 to 6999	Zone 8: ≥ 7000
	Minimum *Effective Thermal Resistance*, RSI, in m²·°C/W					
Walls	3.60	3.60	3.60	3.60	4.05	4.05
Roofs	5.46	5.46	5.46	5.46	6.17	6.17
Floors	5.46	5.46	5.46	5.46	6.17	6.17

[1] See Sentence 1.1.4.1.(1).

2) The *effective thermal resistance* of portions of a *foundation* wall that are above ground of which less than 50% of the area is exposed to exterior air shall be equal to at least that shown in Table 3.2.3.1. for walls in contact with the ground. (See Note A-3.2.2.2.(2) and (3).)

3) The percentage of *foundation* walls that are above ground described in Sentence (2) shall be assessed independently for

a) each of the walls,

b) each of the *storeys*, and

c) each constructive system.

(See Note A-3.2.2.2.(2) and (3).)

4) Where radiant heating cables or heating or cooling pipes or membranes are integrated to above-ground *opaque building assemblies*, the minimum *effective thermal resistance* provided for in Sentence (1) shall be increased by 25%. (See Note A-3.2.2.2.(4).)

5) The *effective thermal resistance* required for a flat roof may be reduced by not more than 20% at its lowest point when drainage slopes are created by the insulation materials, provided that the value of the average *effective thermal resistance* for the roof is equivalent to the value in Table 3.2.2.2. (See Note A-3.2.2.2.(5).)

6) The *effective thermal resistance* required for a roof may be reduced for a distance of not more than 1200 mm measured from the outside face of the wall when the slope of the roof and the necessary clearance for the ventilation so require, provided that it is equal to at least the value in Table 3.2.2.2. required for an above-ground wall. (See Note A-3.2.2.2.(6).)".

3.2.2.3.

Replace "Sentences (3), (4) and 3.2.1.3.(1)" in Sentence (2) by "Article 3.2.1.3.";

Replace Sentence (3) by the following:

"**3)** The *overall thermal transmittance* of *fenestration* shown in Table 3.2.2.3. shall be reduced by at least 10% in the case of an *addition*

a) whose *floor area* is not more than 200 m², and

b) whose opening percentage exceeds the values prescribed in Sentence 3.2.1.4.(1).";

Strike out Sentence (4);

Replace Table 3.2.2.3. by the following:

"**Table 3.2.2.3.**
Overall Thermal Transmittance of Fenestration
Forming Part of Sentences 3.2.2.3.(2) and (3)

Component	Heating Degree-Days under 18°C of *Building* Location,[1] in Celsius Degree-Days					
	Zone 4: < 3000	Zone 5: 3000 to 3999	Zone 6: 4000 to 4999	Zone 7A: 5000 to 5999	Zone 7B: 6000 to 6999	Zone 8: ≥ 7000
	Maximum *Overall Thermal Transmittance*, in W/(m²·°C)					
Fenestration except *skylights*	2.0	2.0	2.0	2.0	1.6	1.6
Skylights	2.85	2.85	2.85	2.85	2.7	2.7

[1] See Sentence 1.1.4.1.(1)."**.**

3.2.2.4.

Replace "Except as provided in Sentences (2), (3), (5) and 3.2.1.3.(1)" in Sentence (1) by "Except as provided in Sentences (2), (4) and (6) and Article 3.2.1.3.";

Replace Sentences (2) and (3) by the following:

"**2)** Except as provided in Sentences (3), (5) and (6), the *overall thermal transmittance* of doors shown in Table 3.2.2.4. shall be reduced by at least 10% in the case of an *addition*

a) whose *floor area* is not more than 200 m², and

b) whose opening percentage exceeds the values prescribed in Sentence 3.2.1.4.(1).

3) The following doors need not comply with Sentence (1) or (2) where their total area is not more than 2% of the gross wall area calculated in accordance with Article 3.1.1.6.:

a) automatic sliding glass doors,

b) revolving doors,

c) fire shutters, and

d) other types of doors having an *overall thermal transmittance* of not more than 4.4 W/(m²·°C).";

Replace Table 3.2.2.4. by the following:

"**Table 3.2.2.4.**
Overall Thermal Transmittance of Doors
Forming Part of Sentences 3.2.2.4.(1) and (2)

Component	Heating Degree-Days under 18°C of *Building* Location,[1] in Celsius Degree-Days					
	Zone 4: < 3000	Zone 5: 3000 to 3999	Zone 6: 4000 to 4999	Zone 7A: 5000 to 5999	Zone 7B: 6000 to 6999	Zone 8: ≥ 7000
	Maximum *Overall Thermal Transmittance*, in W/(m²·°C)					
Glazed doors	2.0	2.0	2.0	2.0	1.6	1.6
Doors without glazing	0.9	0.9	0.9	0.9	0.8	0.8

(1) See Sentence 1.1.4.1.(1).";

Replace Sentence (5) by the following:

"**5)** Storm doors need not comply with Sentence (1) or (2).".

3.2.3.1.

Replace the Article by the following:

"**3.2.3.1. Thermal Characteristics of Walls in Contact with the Ground**

1) Except as provided in Sentences (2) and 3.2.1.3.(2), the *effective thermal resistance* of walls or portions thereof that are below the exterior ground level and are part of the *building envelope* shall not be greater than that shown in Table 3.2.3.1. for the applicable heating-degree-day category taken at 18°C.

2) Where radiant heating cables or heating or cooling pipes or membranes are located in a wall or portion thereof that is below the ground level and that separates *conditioned space* from the ground, the minimum *effective thermal resistance*, provided for in Sentence (1), shall be increased by at least 25%. (See Note A-3.2.3.1.(2).)

Table 3.2.3.1.
Effective Thermal Resistance of Building Assemblies in Contact with the Ground
Forming Part of Sentences 3.2.3.1.(1) and (4), and 3.2.3.2.(1)

Assembly in Contact with the Ground	Heating Degree-Days under 18°C of *Building* Location,(1) in Celsius Degree-Days					
	Zone 4: < 3000	Zone 5: 3000 to 3999	Zone 6: 4000 to 4999	Zone 7A: 5000 to 5999	Zone 7B: 6000 to 6999	Zone 8: ≥ 7000
	Minimum *Effective Thermal Resistance*, RSI_E, in $m^2 \cdot °C/W$					
Walls	2.64	2.64	2.64	2.64	2.64	2.64
Roofs	2.64	2.64	2.64	2.64	2.64	2.64

(1) See Sentence 1.1.4.1.(1).

3) Insulation on walls or portions thereof that are in contact with the ground shall extend at least 2.4 m down from contiguous ground level or to the bottom of the wall. (See Note A-3.2.3.1.(3).)

4) The *effective thermal resistance* of the vertical portion of a slab-on-ground shall be the same as that required for walls in contact with the ground over the full height of the slab. (See Note A-3.2.3.1.(4).)".

3.2.3.2.

Replace Sentence (1) by the following:

"**1)** The *effective thermal resistance* of below-ground roofs that are part of the *building envelope* and are less than 2.4 m below the exterior ground level shall be equal to at least the values shown in Table 3.2.3.1. for the heating-degree-day category taken at 18°C. (See Note A-3.2.3.2.(1).)";

Strike out Sentence (2).

3.2.3.3.

Replace the Article by the following:

"**3.2.3.3. Thermal Characteristics of Floors in Contact with the Ground**

(See Note A-3.2.3.3.)

1) For the purposes of this Article, "floor" also means the unfinished surface of a crawl space, where it is *conditioned space*.

2) Floors separating *conditioned space* from the ground shall be insulated with material having a thermal resistance of at least the value shown in Table 3.2.3.3.-A or 3.2.3.3.-B, as the case may be.

Table 3.2.3.3.-A
Insulation of Floors in Contact with the Ground for any Occupancy except Dwelling Units
Forming Part of Sentences 3.2.3.3.(2) and (3)

Floors	Insulation Material	Intersection of the Foundation Wall with the Floor-on-ground
	Minimum Thermal Resistance, RSI, in m²·°C/W	
Floors of a slab-on-ground that does not have integrated heating ducts or cables or heating or cooling pipes	1.76 installed at the perimeter of the floor over a width of 1.2 m	n/a
Floors less than 0.6 m under contiguous ground level that does not have integrated heating ducts or cables or heating or cooling pipes	0.88 installed over the full area or 1.32 installed at the perimeter of the floor-on-ground over a width of at least 1.2 m	0.88
Floors-on-ground that have integrated heating ducts or cables or heating or cooling pipes	1.76 installed over the full area	1.32
Floors of a slab-on-ground that have integrated heating ducts or cables or heating or cooling pipes		n/a

Table 3.2.3.3.-B
Insulation of Floors in Contact with the Ground for Dwelling Units
Forming Part of Sentences 3.2.3.3.(2) and (3)

Floors	Insulation Material	Intersection of the Foundation Wall with the Floor-on-ground
	Minimum Thermal Resistance, RSI, in m²·°C/W	
Floors of a slab-on-ground that does not have integrated heating ducts or cables or heating or cooling pipes	1.32 installed over the full area	n/a
Floors at less than 0.6 m under contiguous ground level that do not have integrated heating ducts or cables or heating or cooling pipes		1.32
Floors at more than 0.6 m under contiguous ground level that do not have integrated heating ducts or cables or heating or cooling pipes	0.88 installed over the full area, or 1.32 installed at the perimeter of the floor-on-ground over a width of at least 1.2 m	0.7
Floors of a slab-on-ground that have integrated heating ducts or cables or heating or cooling pipes	1.76 installed over the full area	n/a
Floors-on-ground that have integrated heating ducts or cables or heating or cooling pipes		1.32

3) The thermal resistance of the insulation material between the foundation wall and the floor-on-ground shall be equal to at least the values shown in Table 3.2.3.3.-A or 3.2.3.3.-B, except

a) where the insulation is installed on the exterior of the foundation wall and extends 2.4 m down from ground level or to the lower portion of the wall, or

b) where the foundation wall and the floor slab are insulated from the inside and the insulation between the wall and the slab is continuous.”.

3.2.4.2.	Replace Sentences (1) and (2) by the following: "**1)** All *opaque building assemblies* that act as environmental separators, excluding opaque sections of curtain walls, shall include an *air barrier assembly* conforming to Sentence (2). **2)** *Air barrier assemblies* shall have an air leakage rate not more than 0.2 L/(s·m²) at a pressure differential of 75 Pa determined in accordance with Article 3.1.1.8."; Strike out Sentence (3).
3.2.4.3.	Replace the heading of the Article by the following: "**3.2.4.3. Fenestration and Curtain Walls**"; Replace Sentence (2) by the following: "**2)** Curtain walls that act as environmental separators shall have an air leakage rate not greater than 0.20 L/(s·m²) at a pressure differential of 75 Pa determined in accordance with Article 3.1.1.8."; Replace "when tested in accordance with AAMA/WDMA/CSA 101/I.S.2/A440, "NAFS- North American Fenestration Standard/Specification for Windows, Doors, and Skylights," at a pressure differential of 75 Pa" in Sentences (3) and (4) by "determined in accordance with Article 3.1.1.8.".
3.2.4.4.	Replace Sentence (1) by the following: "**1)** Except as provided in Sentences (2) and (3), doors that act as environmental separators shall have an air leakage rate not greater than 0.50 L/(s·m²) at a pressure differential of 75 Pa determined in accordance with Article 3.1.1.8."; Replace "5.0 L/(s·m²) when tested as a complete assembly in accordance with ASTM E 283, "Determining Rate of Air Leakage Through Exterior Windows, Curtain Walls, and Doors Under Specified Pressure Differences Across the Specimen," at a pressure differential of 75 Pa" in Sentence (2), by the following: "5.0 L/(s·m²) at a pressure differential of 75 Pa determined in accordance with Article 3.1.1.8."; Replace "5.0 L/(s·m²) when tested as a complete assembly in accordance with ASTM E 283, "Determining Rate of Air Leakage Through Exterior Windows, Curtain Walls, and Doors Under Specified Pressure Differences Across the Specimen," at a pressure differential of 75 Pa, provided that the total area of such doors does not exceed 2% of the gross wall area calculated in accordance with Article 3.1.1.6" in Sentence (3) by the following: "5.0 L/(s·m²) when tested as a complete assembly at a pressure differential of 75 Pa, provided that the total area of such doors does not exceed 2% of the gross wall area calculated in accordance with Article 3.1.1.6. and determined in accordance with Article 3.1.1.8. (See Note A-3.2.4.4.(3).)".
3.3.1.	Replace the heading of the Subsection by the following: "**3.3.1. General**".

3.3.1.1.	Replace the Article by the following: "**3.3.1.1. Application** **1)** Subject to the limitations stated in Article 3.3.1.2., where the *building envelope* does not comply with the requirements of Section 3.2. or 3.4., it shall comply with this Section. **2)** This Section does not apply to building assemblies of the *building envelope* separating *conditioned spaces* intended to be conditioned to temperatures differing by more than 10°C at design conditions. **3)** For the purposes of this Section, "reference *building*" refers to a *building* whose envelope complies with the requirements of Section 3.2.".
3.3.1.2.	Replace the Article by the following: "**3.3.1.2. Limitations** (See Note A-3.3.1.2.) **1)** The method of trade-off paths described in this Section may only take into consideration the energy performance of above-ground building assemblies of the *building envelope* covered in Sentences 3.2.1.2.(3) to (7) and (10), 3.2.2.2.(1), 3.2.2.3.(2) and Article 3.2.2.4. **2)** Building assemblies of the *building envelope* that are not covered in Sentence (1) shall comply with the requirements of Section 3.2. **3)** Except as provided in Sentence 3.3.1.3.(2), performances that can be characterized in accordance with Articles 3.1.1.5. and 3.1.1.6. shall be taken into consideration in the trade-off path for a) the minimum energy performance of above-ground building assembly of the reference *building envelope* covered in Sentence (1), and b) the lower or higher performance of building assemblies of the proposed *building* covered in Sentence (1). **4)** The trade-off path shall apply individually to building assemblies of spaces whose heating setpoint is less than 18°C and to those whose heating setpoint is more than 18°C.".
	Add the following Article: "**3.3.1.3. Compliance** **1)** Except as provided in Sentence (2), compliance with this Section shall be determined using the equation that follows to demonstrate that the sum of the areas of all above-ground assemblies of the proposed *building* divided by their *effective thermal resistance* is not more than it would be if all above-ground assemblies complied with Section 3.2.: $$\sum_{i=1}^{n} \frac{A_i}{RSI_{Eip}} \leq \sum_{i=1}^{n} \frac{A_i}{RSI_{Eir}}$$ where n = total number of above-ground assemblies, A_i = area of above-ground assembly i of the *building* calculated in accordance with the requirements of Article 3.1.1.6., in m², RSI_{Eip} = *effective thermal resistance* of above-ground assembly i of the proposed *building*, in (m²·°C)/W, and RSI_{Eir} = *effective thermal resistance* of above-ground assembly i of the reference *building*, in (m²·°C)/W. (See Note A-3.3.1.3.(1).)

2) Except as provided in Sentence (3), the *effective thermal resistance* of above-ground *opaque building assemblies* of the *building envelope* shall be derated using the equation that follows to take into account the thermal bridging covered in Sentence 3.3.1.2.(1):

$$RSI_{EDi} = \frac{1}{\frac{\sum_{j=1}^{m}(\Psi_j \cdot L_j) + \sum_{k=1}^{n}(\chi_k \cdot N_k)}{A_i} + \frac{1}{RSI_{Ei}}}$$

where

RSI_{EDi} = derated *effective thermal resistance* of *opaque building assembly* i of the proposed or reference *building*, in (m²·°C)/W,

Ψ_j = *linear thermal transmittance* of the type j intersection calculated in accordance with Sentence 3.1.1.5.(7), in W/(m·°C),

L_j = length of the type j intersection, in m,

m = total number of types of intersections,

χ_k = *point thermal transmittance* of the type k penetration calculated in accordance with Sentence 3.1.1.5.(7), in W/°C,

N_k = number of type k point penetrations,

n = total number of types of penetrations,

A_i = area of *opaque building assembly* i, calculated in accordance with Article 3.1.1.6., in m², and

RSI_{Ei} = *effective thermal resistance* of the non-derated *opaque building assembly*, calculated in accordance with any of Sentences 3.1.1.5.(5) and (6), in (m²·°C)/W.

(See Note A-3.3.1.3.(2).)

3) Where the requirements of Sentences 3.2.1.2.(1) to (7) and (10) are complied with, a *point thermal transmittance* of 0.5 W/°C and the values of *linear thermal transmittance* in Table 3.3.1.3.

a) may be used for the applicable penetrations or intersections of the proposed *building*, and

b) shall be used for the applicable penetrations and intersections of the reference *building*.

(See Note A-3.3.1.3.(3).)

Table 3.3.1.3.
Default Linear Thermal Transmittance of Certain Intersections Complying with the Prescriptive Requirements of Article 3.2.1.2.
Forming Part of Sentence 3.3.1.3.(3)

Intersection	Maximum *Linear Thermal Transmittance*, Ψ, in W/(m·°C)
Wall/roof	0.325
Wall/intermediate floor	0.300
Wall/projection	0.500
Wall/foundation	0.450

4) Where the *effective thermal resistance* of the opaque section of curtain walls has not been determined in accordance with Sentence 3.1.1.5.(6), the values that follow shall be used in the proposed *building*:

a) 0.35 (m²·°C)/W, where the opaque section of curtain walls does not have an insulation material, or

b) 0.88 (m²·°C)/W, where the opaque section of curtain walls has an insulation material.”.

3.4.1.2.	Replace the Article by the following: "**3.4.1.2. Limitations** (See Note A-3.4.1.2.) **1)** The performance path described in this Section may only take into consideration the energy performance of the building assemblies of the *building envelope* covered a) in Articles 3.2.1.2. to 3.2.1.4. and 3.2.2.2 to 3.2.2.4., and b) except as provided in Sentence 8.4.3.3.(7), in Subsection 3.2.3. **2)** The building assemblies of the *building envelope* that are not covered in Sentence (1) shall comply with the requirements of Section 3.2.".
3.5.1.1.	Replace respectively the headings of the appropriate Articles in Table 3.5.1.1. by the following: "**3.1.1.7. Calculation of Effective Thermal Resistance**"; "**3.2.4.3. Fenestration and Curtain Walls**"; Replace respectively, in numerical order, the headings, objectives and functional statements in Table 3.5.1.1. by the following: "**3.2.1.2. Continuity of Insulation** (1) [F92-OE1.1] (3) [F92-OE1.1] (4) [F92-OE1.1] (5) [F92-OE1.1] (6) [F92-OE1.1] (7) [F92-OE1.1] (8) [F92-OE1.1]"; "**3.2.1.3. Spaces Heated or Cooled to Different Temperatures** (1) [F92-OE1.1] (2) [F92-OE1.1]"; "**3.3.1.1. Application** (2) [F92-OE1.1]"; "**3.3.1.2. Limitations** (1) [F90, F92-OE1.1] (2) [F90, F92-OE1.1] (3) [F90, F92-OE1.1]"; Insert respectively in Table 3.5.1.1, in numerical order, the following objectives and functional statements: "**3.1.1.5. Thermal Characteristics of Building Assemblies** (6) [F92-OE1.1] (7) [F92-OE1.1]"; "**3.4.1.2. Limitations** (2) [F90, F92-OE1.1]";

	Insert in Table 3.5.1.1., in numerical order, the following articles, objectives and functional statements: “**3.1.1.8. Air Leakage in Building Assemblies** (1) [F90-OE1.1] (2) [F90-OE1.1] (3) [F90-OE1.1] (4) [F90-OE1.1]”; “**3.3.1.3. Compliance** (1) [F92-OE1.1] (2) [F92-OE1.1] (3) [F92-OE1.1]”; --- Strike out respectively the following objectives and functional statements in Table 3.5.1.1.: “**3.1.1.7. Calculation of Overall Thermal Transmittance** (6) [F92-OE1.1] (7) [F92-OE1.1] (8) [F92-OE1.1] (9) [F92-OE1.1]”; “**3.2.2.3. Thermal Characteristics of Fenestration** (4) [F92-OE1.1]”; “**3.2.2.4. Thermal Characteristics of Doors and Access Hatches** (3) [F92-OE1.1]”; “**3.2.3.1. Thermal Characteristics of Walls in Contact with the Ground** (5) [F92-OE1.1]”; “**3.2.3.2. Thermal Characteristics of Roofs in Contact with the Ground** (2) [F92-OE1.1]”; “**3.2.3.3. Thermal Characteristics of Floors in Contact with the Ground** (1) [F92-OE1.1] (4) [F92,F95-OE1.1] (5) [F92-OE1.1]”; “**3.2.4.2. Opaque Building Assemblies** (3) [F90-OE1.1]”.
Division B Part 3 Schedule A	
A-3.1.1.2. (1)(a)	Strike out the Note.
	Add the following Note:

	"**A-3.1.1.2.(1)(b) Building with Low Heat Requirement.** This exemption could apply, for example, to buildings in which permanent processes produce at all times sufficient heat so that no other heating source of a capacity of more than 10 W/m² is necessary to ensure comfort for the occupants during the whole year.".
A-3.1.1.3.(1)	Replace Figure A-3.1.1.3.(1) by the following: " 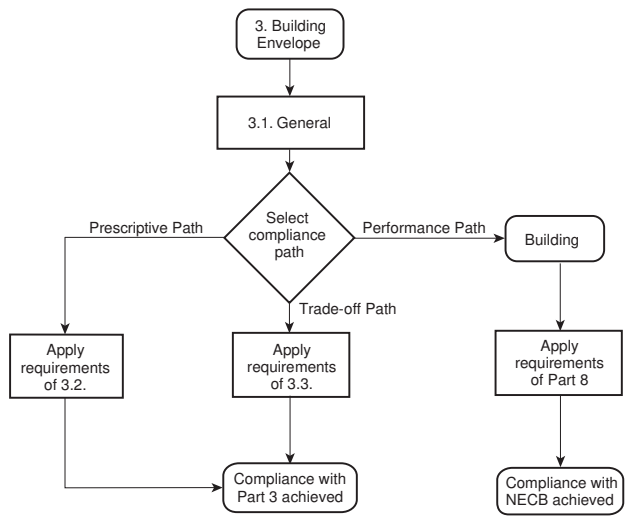 **Figure A-3.1.1.3.(1)** **Code compliance paths for the building envelope**".
A-3.1.1.5.	Strike out the Note.
	Add the following Notes: "**A-3.1.1.5.(5)(a) and (b) Calculation of the Effective Thermal Resistance of Opaque Building Assemblies using Simple Calculations.** Where the main frame of the assembly is composed of metal posts, it is possible to use the simple calculation method described in Section 6.2 of ISO 6946, "Building components and building elements -- Thermal resistance and thermal transmittance -- Calculation methods," to which weighing coefficients are applied based on the configuration of the main frame. That solution for calculating the effective thermal resistance applies only for simple metal frames, that is, where there is absence of double frame and horizontal, vertical or point resilient bars, in which case the digital simulation of the heat transfer or a laboratory test is used. The method for calculating isothermal planes described in the "ASHRAE Handbook – Fundamentals" may be used for calculating the effective thermal resistance of assemblies that have a discontinuity in insulation layers. To implement that simple calculation method, the material creating the discontinuity in the insulating layer must have a thermal conductivity slightly different from that of the insulating layer, as is the case for assemblies with wood frames. That method could not apply to a metal frame assembly because the difference in thermal conductivity between the frame and the insulation does not comply with the condition provided for in Subclause 3.1.1.5.(5)(b)(ii).

	A-3.1.1.5.(5)(c), (6)(c) and (7)(a) Digital Simulation of Heat Transfer. The "ASHRAE Handbook – Fundamentals" refers to the approach developed as part of research project ASHRAE RP-1365, "Thermal Performance of Building Envelope Details for Mid- and High-Rise Buildings" (Morrison Hershfield), for calculating thermal characteristics of building assemblies. The thermal characteristics of building assemblies determined according to such an approach involve the implementation of digital simulation tools that allow to obtain, for example, using a finite element analysis, the distribution of heat under steady state in a building assembly. The thermal characteristics such as linear and point thermal transmittance of building details or the effective thermal resistance of a building assembly may be determined with that type of simulation.".
A-3.1.1.6.(1)	Replace the Note by the following: "**A-3.1.1.6.(1) Calculation of the Area of Opaque Building Assemblies.** Parapets, projected fins, ornementation, appendages, and fenestration and doors, are excluded from the area of opaque building assemblies. The area of an opaque building assembly in contact with the ground shall be calculated from the exterior ground level to the bottom surface of the slab-on-ground.

	Figure A-3.1.1.6.(1) illustrates the calculation of the area of opaque building assemblies according to the requirements of Sentence 3.1.1.6.(1). 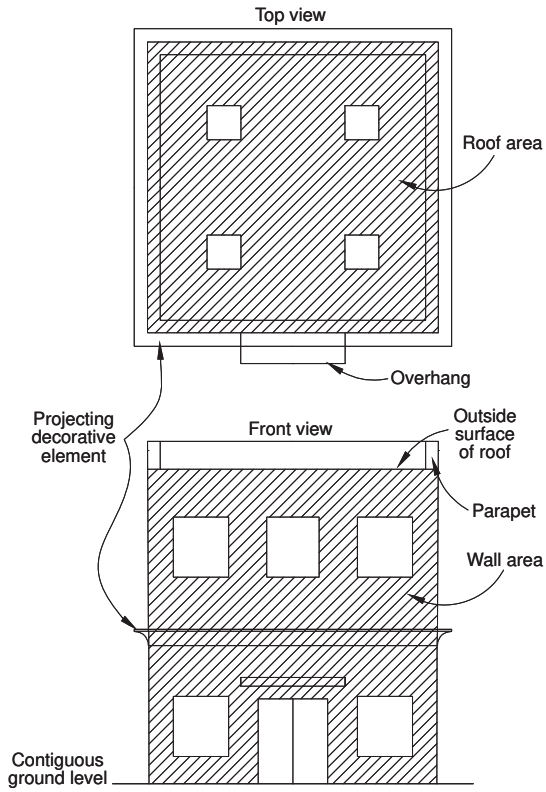 **Figure A-3.1.1.6.(1)** **Calculation of the area of opaque building assemblies**".
A-3.1.1.6.(2)	Strike out the Note.
	Add the following notes: "**A-3.1.1.6.(3) Fenestration and Door Areas.** The method of calculation of fenestration and door areas is slightly different in Sentence 3.1.1.6.(4) from the one used in CAN/CSA-A440.2/A440.3, "Fenestration Energy Performance/User Guide to CSA A440.2-14, Fenestration Energy Performance," for windows and doors. For calculating the door and fenestration area of a building, the Code uses the dimensions of rough openings including frames and sashes to facilitate determination of compliance. Garage doors are included in the calculation of the door and fenestration area of a building. The opaque sections (spandrel panels) of curtain walls are part of the opaque building assembly. That component of curtain walls shall be taken into account in the calculation of the area of opaque building assemblies and not in the calculation of the fenestration and door area.

Figure A-3.1.1.6.(3) illustrates the requirements of Sentence 3.1.1.6.(3).

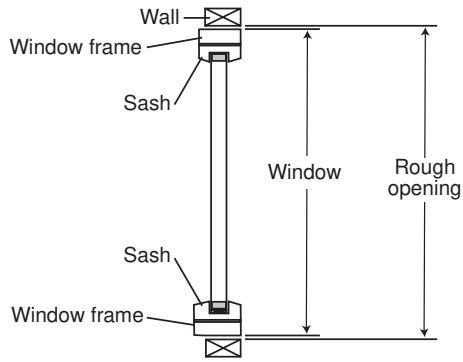

Figure A-3.1.1.6.(3)

Measuring fenestration and door areas

A-3.1.1.6.(5) Areas of Other Fenestration. Figure A-3.1.1.6.(5) illustrates how to measure the area of glass panes as described in Sentence 3.1.1.6.(5).

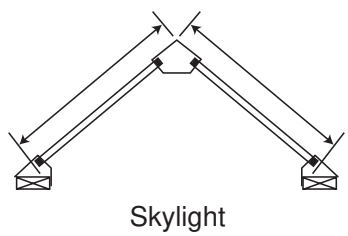

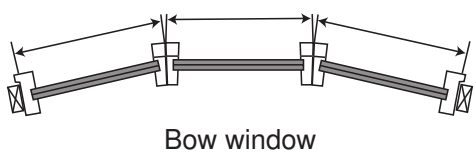

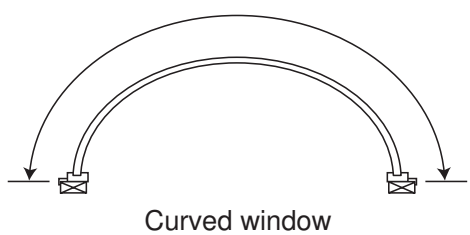

Figure A-3.1.1.6.(5)

Measuring areas of glazing that is not in the same plane

	A-3.1.1.7.(1) Calculation of the Effective Thermal Resistance of Opaque Building Assemblies of the Building Envelope. For calculating the effective thermal resistance, Part 3 requires that the contribution of all continuous components of the envelope such as the insulation, siding and sheating, of all repetitive structural members, such as columns, studs and resilient bars, and all secondary structural members such as lintels, sills and plates, be taken into account. Members that break the building envelope, such as beams, s tuds, joists and balconies, also have an effect on overall effective thermal resistance, but are excluded from the calculations of the effective thermal resistance, except as provided in Article 3.1.1.7. and Section 3.3. Those elements are the subject of prescriptive requirements detailed in Article 3.2.1.2.”.
A-3.1.1.7.(2)	Replace the Note by the following: “**A-3.1.1.7.(2) Continuity of Insulation at Beams and Columns.** The effective thermal resistance at spandrel beams may be reduced compared to what is required for walls penetrated by beams without any penalty, provided that the resulting effective thermal resistance across the building envelope at the spandrel beam is not less than half the required effective thermal resistance for the wall (see Figure A-3.1.1.7.(2)). A similar approach may be used for columns in exterior walls. 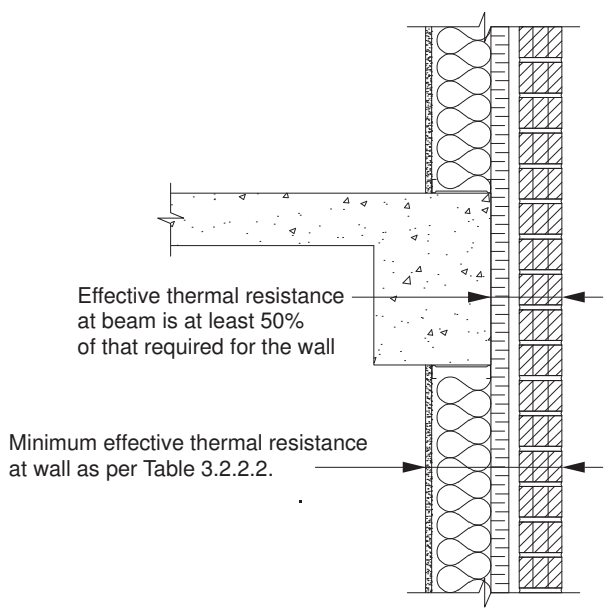 **Figure A-3.1.1.7.(2)** **Continuity of insulation at beams**.”
A-3.1.1.7.(3)	Replace the Note by the following: “**A-3.1.1.7.(3) Penetrations of the Building Envelope.** The minor ties and anchors necessary for the assembly of the envelope, such as screws, bolts and masonry anchors, may be excluded from the calculation of the effective thermal resistance for demonstrating compliance. Other partial or complete discontinuities of insulation listed in Sentence 3.1.1.7.(3) need not be part of the calculation of

	the effective thermal resistance of the opaque building assembly affected where the penetrations comply with the requirements of Article 3.2.1.2. **Permafrost** Penetrations caused by metal pilings supporting the buildings constructed in permafrost regions need not be part of the calculation of the effective thermal resistance of the opaque building assembly where the penetrations comply with the requirements of Article 3.2.1.2.”.
A-3.1.1.7.(4)	Replace the Note by the following: “**A-3.1.1.7.(4) Effect of an Unconditioned Space.** The effective thermal resistance required in Sentence 3.1.1.7.(4), which is equivalent to that of a layer of glass, is intended to provide an easy credit under the prescriptive path for any unconditioned space that may be protecting a component of the building envelope. The value given does not take into account the construction of the enclosure surrounding the unconditioned space; the construction of this enclosure being uncontrolled by this Code, too many variables, such as its size or airtightness, may negate any higher credit that could be allowed. There may be simulation tools under the performance path that can provide a better assessment of the effect of an unheated space, which may be used to advantage when an unheated space is designed to provide significantly better protection than the assumed worst-case scenario. Vented spaces, such as attic and roof spaces or uninsulated crawl spaces, are considered to be part of the exterior space; therefore, Sentence 3.1.1.7.(4) does not apply when calculating the effective thermal resistance of opaque building assemblies.”.
A-3.1.1.7.(5)	Strike out the Note.
A-3.1.1.7.(8)	Strike out the Note.
	Add the following Note: “**A-3.1.1.8.(1) Air Barrier Assembly Testing.** Air barrier assemblies of the envelope of a building are subject to structural loading induced by mechanical systems, wind pressure and stack effect. Those assemblies may also be affected by physical degradation resulting from thermal or structural movement throughout time. The limits of the tests to be conducted in accordance with CAN/ULC-S742, “Air Barrier Assemblies – Specification,” and ASTM E 2357, “Determining Air Leakage of Air Barrier Assemblies,” are indicated in the test procedures to which they refer.”.
A-3.2.1.2.(1)	Replace the Note by the following: “**A-3.2.1.2.(1) Continuity of Insulation.** Sentence 3.2.1.2.(1) applies to building components such as partitions, chimneys, fireplaces, and columns and beams that are embedded along exterior walls, but not to stud framing and ends of joists. Studs and joists in frame construction are not considered to break the continuity of the insulation. The Sentence also applies to components of mechanical and electrical systems in walls, roofs or floors.”.

Add the following Notes:

"**A-3.2.1.2.(2) Structural Members and Minor Penetrations.** Sentence 3.2.1.2.(2) takes into account the fact that repetitive structural members are already included in the method for calculating effective thermal resistance of building assemblies as described in Article 3.1.1.7.

A-3.2.1.2.(3) Break in the Continuity of Insulation. Where they penetrate the envelope, interior walls, foundation walls, firewalls, party walls, structural members such as slabs, ornementations and other appendages are an important source of heat losses and have a significant impact on the overall thermal performance of the building envelope.

Figures A-3.2.1.2.(3)-A, A-3.2.1.2.(3)-B, A-3.2.1.2.(3)-C and A-3.2.1.2.(3)-D illustrate ways to comply with the requirements of Sentence 3.2.1.2.(3).

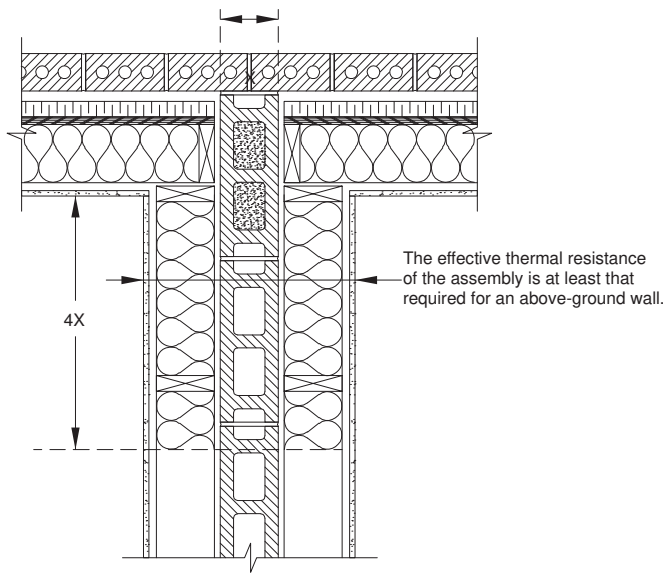

Figure A-3.2.1.2.(3)-A

Example of a firewall part of a penetration insulated on both of its sides in accordance with 3.2.1.2.(3)(a)

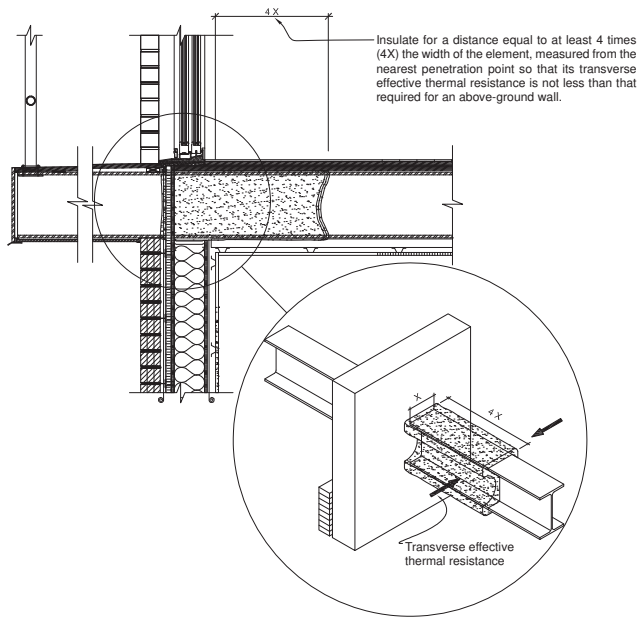

Figure A-3.2.1.2.(3)-B

Example of a structural beam part of a penetration insulated on all its surfaces in accordance with Clause 3.2.1.2.(3)(a)

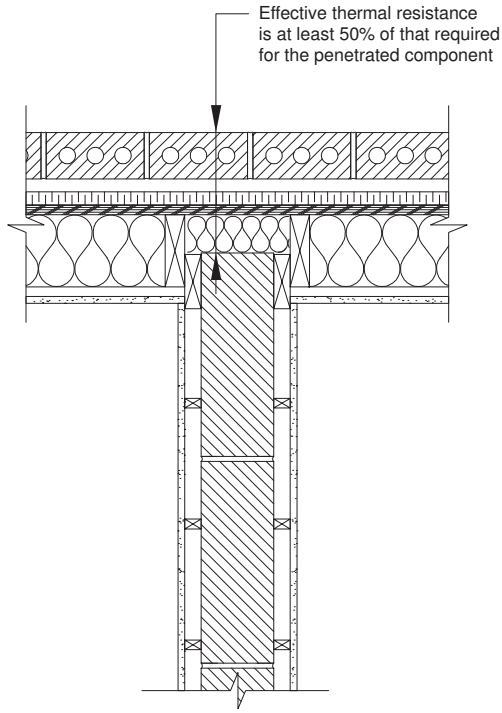

Figure A-3.2.1.2.(3)-C

Example of a party wall part of a penetration insulated along the plane of the insulation of the exterior wall in accordance with Clause 3.2.1.2.(3)(b)

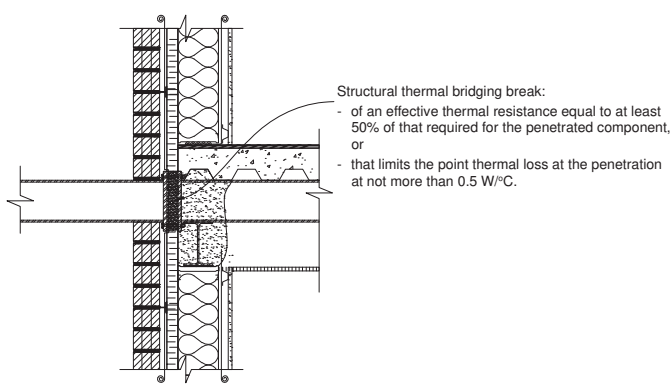

Figure A-3.2.1.2.(3)-D

Example of a structural beam part of a penetration insulated along the plane of the insulation of the exterior wall in accordance with Clauses 3.2.1.2.(3)(b) and 3.2.1.2.(10)".

A-3.2.1.2.(4)

Replace the Note by the following:

"**A-3.2.1.2.(4) Insulation of a Concrete Slab.** Sentence 3.2.1.2.(4) is intended to limit heat loss at the level of concrete structural slabs that are often extended outward to become balconies. That heat loss results in an excessive energy consumption and may also be the source of discomfort for occupants. Figures A-3.2.1.2.(4)-A, A-3.2.1.2.(4)-B and A-3.2.1.2.(4)-C show a way to comply with the requirements of Sentence 3.2.1.2.(4).

The effective thermal resistance of the structural thermal bridging breaker excludes metal reinforcing members.

Where the assembly complies with the requirements of Clause 3.2.1.2.(4)(b), the insulation material under and above the slab should be mould resistant.

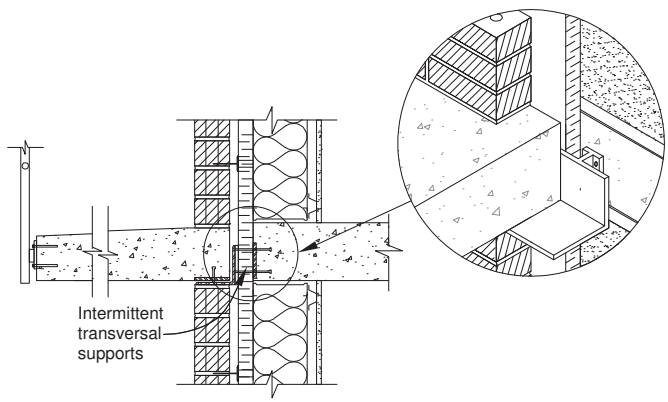

Figure A-3.2.1.2.(4)-A

Insulation in continuity with the insulation of the component penetrated by the use of angles for intermittent transversal supports, according to Clause 3.2.1.2.(4)(a)

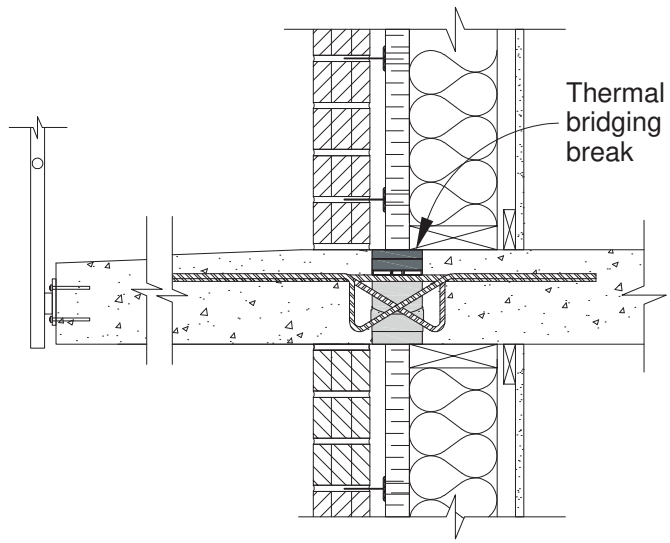

Figure A-3.2.1.2.(4)-B

Insulation in continuity with the insulation of the component penetrated by the use of thermal bridging breaks, according to Clause 3.2.1.2.(4)(a)

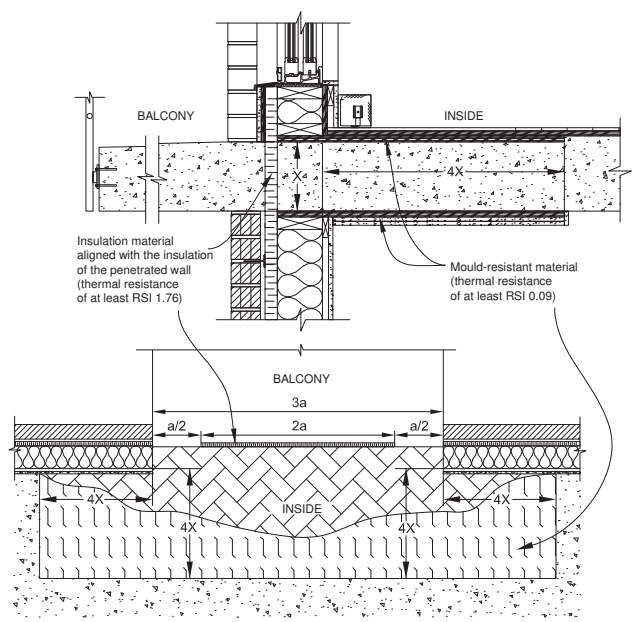

Figure A-3.2.1.2.(4)-C

Insulation of a balcony slab over two thirds of its surface, according to Clause 3.2.1.2.(4)(b)".

	Add the following Note: "**A-3.2.1.2.(5) Intermittent Transversal Supports.** Sentence 3.2.1.2.(5) is intended to reduce the contact surface between anchoring devices and structural members to limit heat loss at the level of those elements. Figure A-3.2.1.2.(5) shows how to comply with the requirements of Sentence 3.2.1.2.(5). It should be noted that Sentence 3.2.1.2.(3) provides for requirements concerning the insulation of the slab. 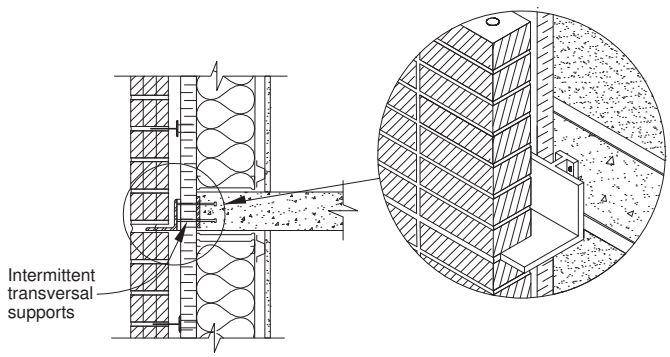 **Figure A-3.2.1.2.(5)** **Shelf angle attached to intermittent transversal supports**".
A-3.2.1.2.(6)	Replace "closely spaced structural members, such as studs or top plates, do not have to be taken into account, as provided in Sentence 3.1.1.7.(1)" at the end of the Note by "structural members, such as studs and top plates, do not have to be taken into account, as provided in Sentences 3.1.1.7.(1) and 3.2.1.2.(2).".
	Add the following Notes: "**A-3.2.1.2.(7) Insulation Overlap**. Where the break in insulation is due to the perpendicular interposition of a member of the envelope relative to another, Sentence 3.2.1.2.(7) requires that the overlap be carried out to extend the path of least thermal resistance from the inside out or toward an unheated adjacent space, as illustrated in Figure A-3.2.1.2.(7).

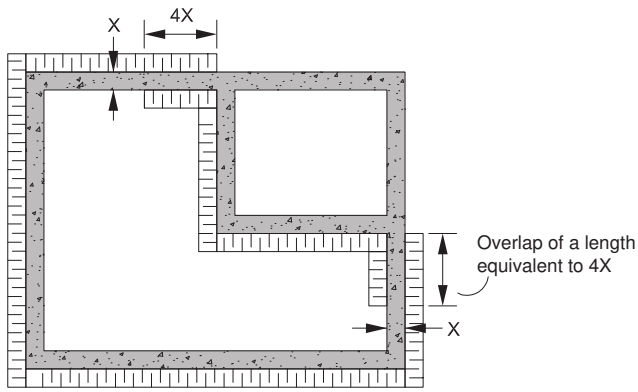

Figure A-3.2.1.2.(7)

Overlap of insulation planes in accordance with Sentence 3.2.1.2.(7)

A-3.2.1.2.(8) Overlap of Insulation for Hollow-core Masonry Walls. Where 2 insulation planes are separated by a hollow-core masonry wall and they cannot physically join, Sentence 3.2.1.2.(8) provides that they must overlap and the cores of the masonry wall coinciding with the upper and lower edges of each respective insulation plane must be filled with grout, mortar or insulation to carry the air barrier across the wall and limit the effect of convection in the cores, as shown in Figure A-3.2.1.2.(8).

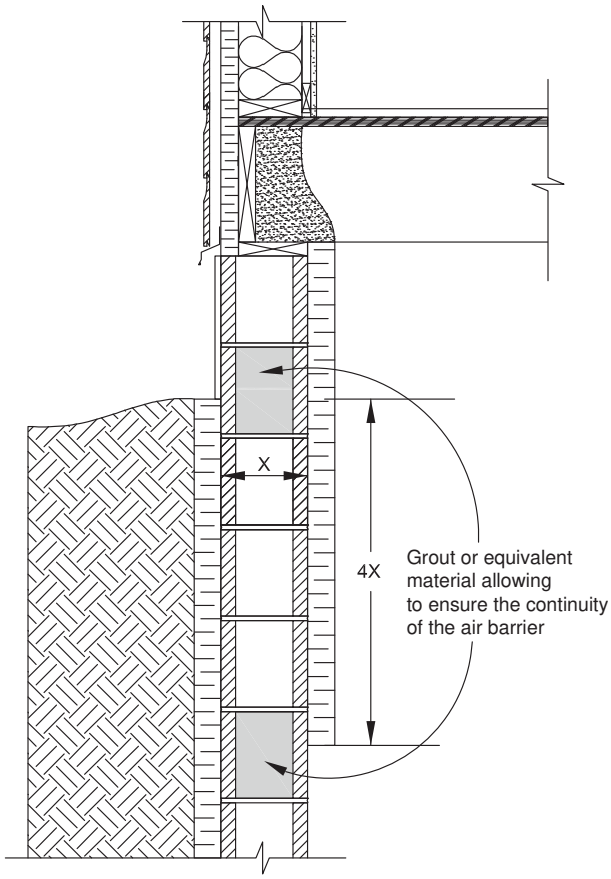

Figure A-3.2.1.2.(8)

Overlap of insulation planes for hollow-core masonry walls

A-3.2.1.2.(9)(c) Continuity of Insulation at the Level of Parapets. The continuity of insulation may be broken at minor transitions between constructive systems, such as backing necessary to attach the membrane, tie rods and flashings. Figure A-3.2.1.2.(9)(c) shows an example where insulation is broken by backing.

	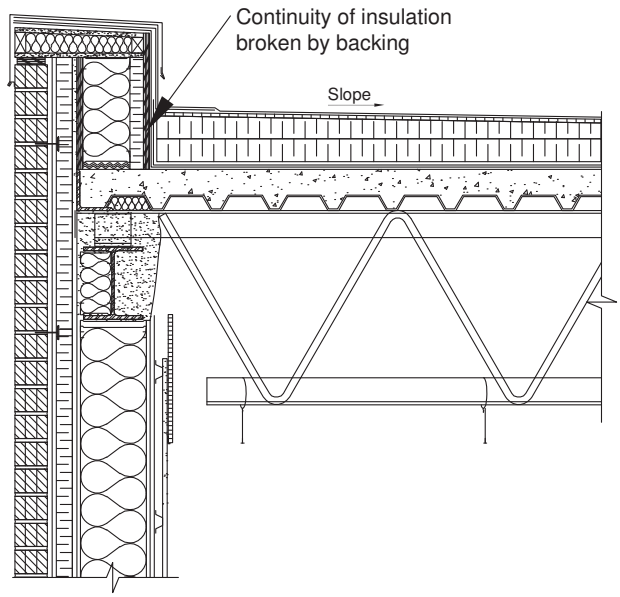 **Figure A-3.2.1.2.(9)(c)** **Example of continuity of insulation at the level of the parapet broken by backing**".
A-3.2.1.3.(1)	Replace the Note by the following: "**A-3.2.1.3.(1) Spaces Heated or Cooled to Different Temperatures.** The requirement of Sentence 3.2.1.3.(1) applies, for example, to walls or floors that separate a space heated to a normal comfort temperature of 22°C from another space maintained at a temperature of 5°C. This would be the case, for example, of a wall between an office block and an attached warehouse. The value of the effective thermal resistance of building assemblies separating 2 spaces at different temperatures varies on the basis of the temperature difference between the spaces and does not depend on the location of the building. That effective thermal resistance is calculated from a reference value corresponding to the effective thermal resistance of building assemblies for less than 6000 degree-days of heating at 18°C.".
	Add the following Note: "**A-3.2.1.3.(2) Semi-Heated Spaces.** The Sentence applies to building assemblies of the envelope separating spaces heated to keep them above freezing. Given that setpoint, heat losses are reduced in winter. The heating setpoint is the temperature determined for the design of the heating system, and the outdoor heating design temperature is the 2.5% January design temperature according to the location of the building. The Sentence does not apply to spaces that must be conditioned to an indoor temperature of less than 18°C, such as a refrigerated warehouse.".

A-3.2.1.4.(1)	Strike out the Note.
A-3.2.2.2.(1)	Replace the Note by the following: "**A-3.2.2.2.(1) Thermal Characteristics of Opaque Above-ground Building Assemblies.** The effective thermal resistance required for above-ground walls also applies to opaque sections of curtain walls and to the above-ground portion of foundation walls, except as provided in Sentence 3.2.2.2.(2). If no RSI value may be obtained for a material or assembly according to the requirements of Article 3.1.1.5., then no RSI value may be allocated to the material or assembly concerned. No growing media and vegetation from a green roof may be allocated an RSI value. A high sun reflectance index of a roof covering does not allow the reduction of the effective thermal resistance required for the roof.".
A-Table 3.2.2.2.	Strike out the Note.
	Add the following Note: "**A-3.2.2.2.(2) and (3) Insulation of an Exterior Wall.** The percentage of the exposed surface of the foundation walls must be established by considering each wall located in a same plane and for each storey. Where the foundation walls comprise various constructive systems, the percentage of the exposed surface is considered separately for each system. The entire above-ground surface of a foundation wall exposed to air over more than 50% of its surface will be insulated as an above-ground wall and the portion below ground level will be insulated as a wall in contact with the ground. Figure A-3.2.2.2.(2) and (3) shows an example of the application of the Sentence.

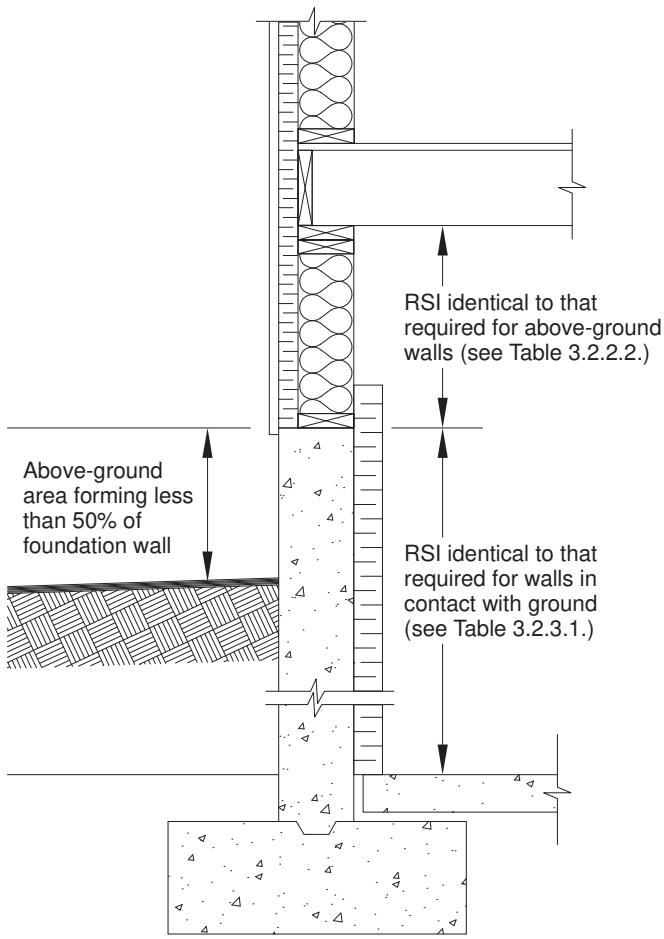

Figure A-3.2.2.2.(2) and (3)

Insulation of a foundation wall having less than 50% of the surface exposed to outdoor air".

A-3.2.2.2.(4)	Replace the Note by the following: "**A-3.2.2.2.(4) Thermal Characteristics of Above-ground Opaque Building Assemblies with Embedded Radiant Heating or Cooling.** Sentence 3.2.2.2.(4) applies in particular to overhanging floors and to insulated walls and top-storey ceilings under a roof or unheated attic space. The requirement also applies to floors above a crawl space, where it is kept at a temperature that differs by more than 10°C. The minimum thermal resistance of a floor, wall or ceiling containing radiant heating cables or heating or cooling pipes or membranes is increased to minimize heat losses due to the increased temperature difference between the interior and exterior surfaces.".

Add the following Notes:

"**A-3.2.2.2.(5) Effective Thermal Resistance of a Flat Roof.** Sentence 3.2.2.2.(5) allows the reduction of the effective thermal resistance around the drain of a roof provided that the dimension of the roof and the slope are sufficient to offset heat losses incurred in the portion that does not comply with the requirements of Article 3.2.2.2. Figure A-3.2.2.2.(5) illustrates the application.

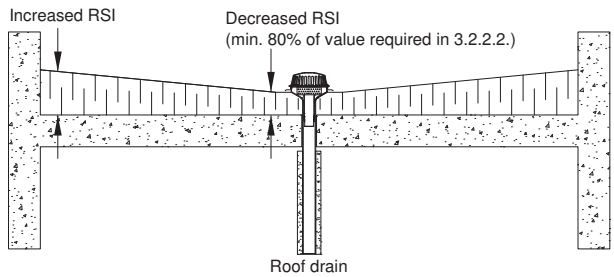

Figure A-3.2.2.2.(5)

Reduction of the sloped insulation on a flat roof in accordance with Sentence 3.2.2.2.(5)

A-3.2.2.2.(6) Effective Thermal Resistance Near the Eaves. The values of the effective thermal resistance required for roofs with attic spaces are greater than those required for walls. The reduction allowed in Sentence 3.2.2.2.(6) assumes that the thickness of the insulation will be increased on the basis of the increase of the slope of the roof with an attic space until the space is sufficient to contain the full thickness of the insulation. Figure A-3.2.2.2.(6) illustrates the reduction allowed in that Article.

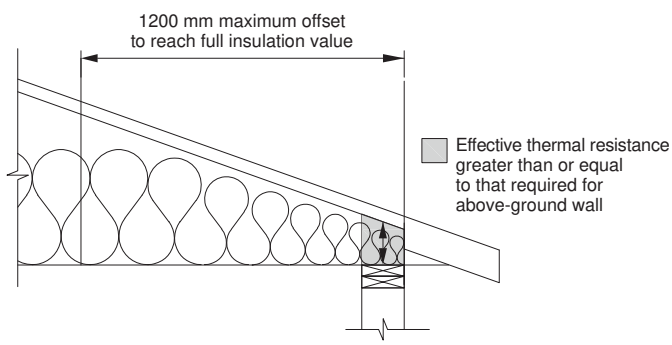

Figure A-3.2.2.2.(6)

Insulation reduction allowed for sloped roofs in accordance with Sentence 3.2.2.2.(6)".

A-3.2.2.3.(4)	Strike out the Note.
A-3.2.2.4.(5)	Strike out the Note.

Add the following Notes:

"**A-3.2.3.1.(2) Thermal Characteristics of Building Assemblies in Contact with the Ground with Embedded Radiant Heating or Cooling.** The minimum effective thermal resistance of a wall that has radiant heating cables or heating or cooling pipes or membranes is increased to counteract the increased heat loss that occurs due to the increased temperature difference between the interior and exterior surfaces.

A-3.2.3.1.(3) Wall in Contact with the Ground. The term "ground level" as used in Sentence 3.2.3.1.(3) has a different meaning than "grade", which is defined in the NBC. The wording in Sentence 3.2.3.1.(3) requires that the bottom of the insulation follow the contours of the exterior ground level at the required depth, as shown in Figure A-3.2.3.1.(3).

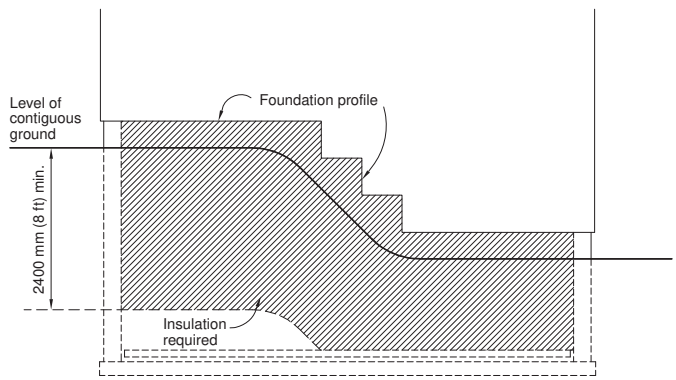

Figure A-3.2.3.1.(3)

Insulation of walls in contact with the ground".

Replace the Note by the following:

"**A-3.2.3.1.(4) Slab-on-Ground.** Sentence 3.2.3.1.(4) requires that the vertical section of a slab-on-ground be insulated over its entire height just like a wall in contact with the ground in accordance with the requirements of Sentence 3.2.3.1.(1), as shown in Figure A-3.2.3.1.(4).

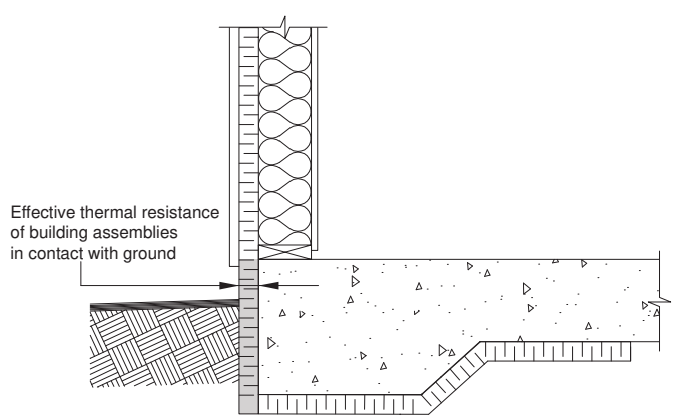

Figure A-3.2.3.1.(4)

	Vertical insulation of a slab-on-ground according to Sentence 3.2.3.1.(4)”.
A-3.2.3.2.(1)	Replace the word “grade” wherever it appears by “ground level”.
A-3.2.3.3.	Replace the Note by the following: “**A-3.2.3.3. Floors in Contact with the Ground.** Article 3.2.3.3. is also intended to include “floors” of heated or cooled crawl spaces even when there is no actual constructed “floor”. The value of the most astringent thermal resistance determines that of the insulation material to be installed over the entire floor surface where the ground level adjacent to a floor-on-ground is variable according to the faces of an immovable. In the case of a building whose floor-on-ground is constructed in tiers, it is possible to apply the requirements of Article 3.2.3.3. to each tier. Consideration should be given to insulating the entire floor at sites where the soil has a high thermal transmittance or where there is a permanently high water table. Figures A-3.2.3.3.-A, A-3.2.3.3.-B, A-3.2.3.3.-C and A-3.2.3.3.-D illustrate the requirements in insulation for various types of floors-on-ground where these are less than 0.6 m below grade. 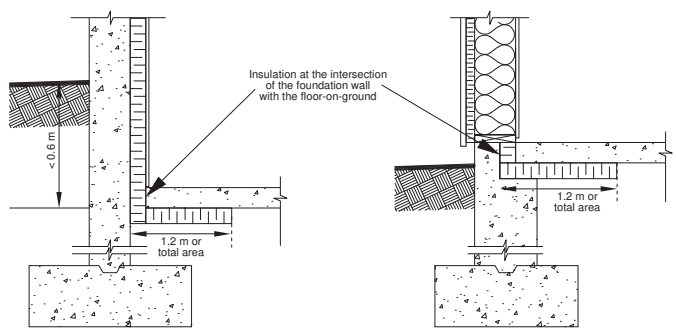 **Figure A-3.2.3.3.-A** **Insulation of floors in contact with the ground – example of insulation under the slab and at the intersection of the foundation wall with the floor-on-ground according to Sentence 3.2.3.3.(1)**

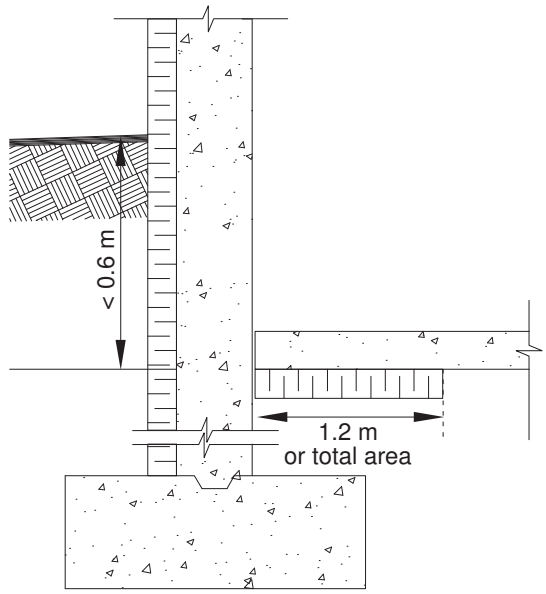

Figure A-3.2.3.3.-B

Insulation of floors in contact with the ground where the foundations are insulated from the exterior according to Clause 3.2.3.3.(2)(a)

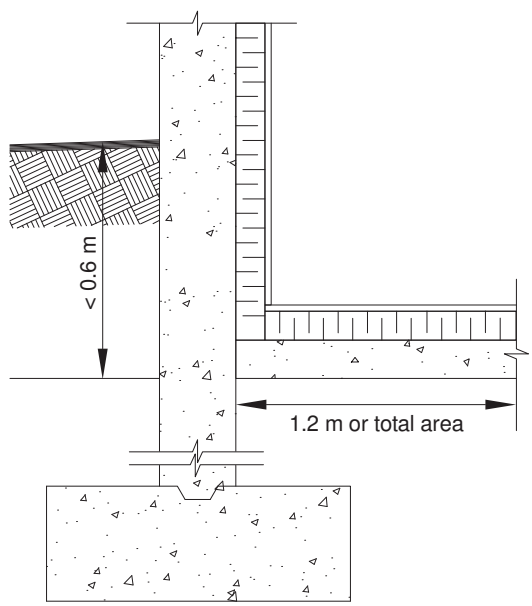

Figure A-3.2.3.3.-C

	Insulation of floors in contact with the ground where the slab and the foundation wall are insulated from the interior according to Clause 3.2.3.3.(2)(b) 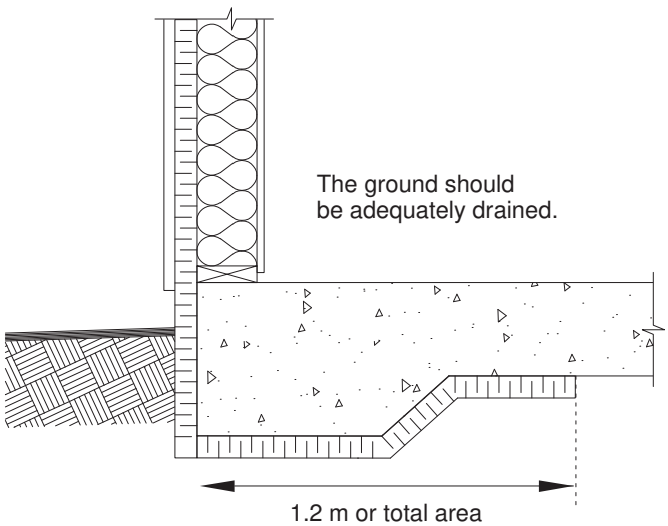 **Figure A-3.2.3.3.-D** **Insulation of floors in contact with the ground for a slab-on-ground with integrated footings according to Sentence 3.2.3.3.(3)**".
A-3.2.4.2.(2) and (3)	Strike out the Note.
	Add the following Note: "**A-3.2.4.4.(3) Vestibule doors.** Main entry doors that are part of a complete air barrier system, such as interior and exterior doors of a vestibule, may be tested as an entire assembly.".
A-3.3.1.1.(6)	Strike out the Note.
	Add the following Notes: "**A-3.3.1.2. Limitations.** The trade-off path described in Section 3.3. allows the designer to offset the non-compliance with the prescriptive requirements of certain above-ground assemblies of the building envelope by considering the enhanced performance, i.e. higher than the prescriptive requirements, of other above-ground assemblies of the envelope. For example, on the basis of the demonstration required in Section 3.3., it would be possible for a designer to offset the lower energy performance of a structural glazing by enhancing the energy performance of other windows of the building above the prescriptive requirements of Section 3.2. Simpler than the building energy performance compliance path detailed in Part 8, the trade-off path is limited to certain components of the building envelope.

A-3.3.1.3.(1) Trade-off. The trade-off path is based on the comparison of the steady-state energy performance of above-ground assemblies of the proposed building envelope, i.e. the building as in the plans and specifications, with that of a reference building: an identical building except its envelope, completely in conformity with the prescriptive requirements of Section 3.2. The area of each above-ground assembly (A_i) must be identical for the reference building and the proposed building. For opaque building assemblies, the effective thermal resistance must be derated in accordance with Sentence (2).

A-3.3.1.3.(2) Derating of the Effective Thermal Resistance. The "derated" effective thermal resistance of opaque building assemblies of the envelope is generated from their effective thermal resistance calculated in accordance with Article 3.1.1.5. It must be derated to account for additional energy losses at the site of intersections and point penetrations of the envelope, if applicable, including those intended in Sentence 3.2.1.2.(1). The intersections most often encountered in buildings are those of opaque building assemblies with parapets, foundations, intermediate floors and projections (such as cantilevered balconies).

Whereas the prescriptive requirements of those intersections or penetrations are descriptive in nature (see Sentences 3.2.1.2.(3) to (7) and (10)), the trade-off requires to quantify heat losses in relation to those intersections and penetrations (those of the required prescriptive details and those of the proposed details) in order to derate the effective thermal resistance of the opaque building assemblies concerned. The operation for the derating of the effective thermal resistance of opaque building assemblies to consider the effect of thermal bridging of intersections and penetrations may be carried out using the equation in Sentence 3.3.1.3.(2).

The derating of the effective thermal resistance of opaque building assemblies may be considered only if it is possible to characterize the parameters of the equation, whose values may be lower or higher than the prescriptive requirements, from recognized paths, in particular those in Articles 3.1.1.5. and 3.1.1.6.

The linear thermal transmittance of an intersection and the point thermal transmittance of a penetration may be obtained, for example, from laboratory tests or generated using digital heat transfer simulations (see those of the research project of ASHRAE RP-1365, "Thermal Performance of Building Envelope Details for Mid- and High-Rise Buildings" provided as a reference in the "ASHRAE Handbook – Fundamentals" or the "Building Envelope Thermal Bridging Guide" by Morrison Hershfield). Point penetrations of the envelope and the wall/roof, wall/foundation, wall/projection and wall/intermediate floor intersections of the reference building must be characterized by the default values in Sentence 3.3.1.3.(3).

A-3.3.1.3.(3) Linear Thermal Transmittance and Point Thermal Transmittance by Default of Certain Intersections and Penetrations. Where the intersection of the proposed building meets the prescriptive requirements of Article 3.2.1.2., the trade-off path allows to retain in that case the default linear thermal transmittance in Table 3.3.1.3. of the applicable intersection or a value of 0.5 W/°C for a point penetration of the envelope. The value retained is identical for the intersection of the proposed building and that of the reference building, neutralizing the energy effect of the intersection or penetration involved; it is possible to set as being identical to the parameter value or to ignore the intersection involved as part of the trade-off.

A-3.4.1.2. Limitations. The performance path allows to offset the non-compliance with the prescriptive requirements of the building assemblies of the envelope considered in Sentence 3.4.1.2.(1) by improving the performance of the lighting systems, the HVAC systems, service water heating systems and building assemblies of the envelope considered in Sentence 3.4.1.2.(1). As with the trade-off path and as provided in Sentence 8.4.2.8.(4), the performance exchanges with

	the building assemblies of the envelope may only be considered if it is possible to characterize the thermal performance of those assemblies in accordance with Articles 3.1.1.5. and 3.1.1.6. The performance path offers the designer more flexibility than the trade-off path since it allows performance exchanges between the various systems of the building. Quantification of exchanges, to be carried out to demonstrate compliance of the building by the performance path, is performed using a building energy model that is described and standardized in Part 8. Contrary to the trade-off path, the performance path allows consideration of a fenestration area greater than 40%, and heat exchanges of building assemblies in contact with the ground, except as provided in Sentence 8.4.3.3.(7). (See Note A-8.4.3.3.(7).) Certain prescriptive requirements, such as those concerning the air barrier of the building envelope, are not specified in Sentence 3.4.1.2.(1). In that case, the proposed building must comply with the prescriptive requirements of Section 3.2.”.
Division B Part 4	
4.1.1.2.	Replace Sentence (2) by the following: “**2)** This Part does not apply to the following lighting systems: a) emergency lighting that is automatically off during normal hours of *building* operation, and b) lighting within *dwelling units* (see Note A-4.1.1.2.(2)(b).”.
4.2.1.1.	Strike out the Article.
4.2.1.2.	Strike out the Article.
4.2.1.3.	Replace the Article by the following: “**4.2.1.3. Limits to Installed Interior Lighting Power** (See Note A-4.2.1.3.) **1)** Each space of the *building* shall appear in a space assembly considered in Sentence (3), except where the building has only one space, in which case the space is deemed to comply with Clauses (2)(a) and (2)(b). **2)** The space assembly considered in Sentence (3) shall a) be composed of more than one space, b) be composed of adjacent or superposed spaces, and c) except as provided in Sentence (4), correspond to a function in Table 4.2.1.5. **3)** Except as provided in Sentence (4), the total *installed interior lighting power* calculated in Article 4.2.1.4. for a space assembly shall not exceed the total *interior lighting power allowance* for that assembly, calculated in accordance with one of the following methods: a) the *building* area method described in Article 4.2.1.5., or b) the space-by-space method described in Article 4.2.1.6.

	4) The total *interior lighting power allowance* of the *building* shall be calculated using the space-by-space method described in Article 4.2.1.6. in the following cases: a) where the space assembly considered in Sentence (1) corresponds to a function different than those in Table 4.2.1.5., or b) where a space cannot be included in a space assembly in conformity with Sentence (2). **5)** The *installed interior lighting power* of a space may exceed the *interior lighting power allowance* of that space, the transfer of power between spaces of the same assembly being permitted. (See Note A-4.2.1.3.(5).) **6)** Where a *building* has several space assemblies, the total *installed interior lighting power* of a space assembly may exceed the total *interior lighting power allowance* of that space assembly, the transfer of power between space assemblies being permitted on the following conditions: a) only one of the methods described in Sentence (1) is used for all the spaces considered, b) one of the following conditions is met: i) electrical inputs for all the spaces considered are connected to the same electric meter, or ii) all the spaces considered are intended to be occupied by the same occupant, and c) except as provided in Sentence 4.2.1.6.(8), the total *interior lighting power allowance* for all the spaces considered is not exceeded. (See Note A-4.2.1.3.(6).)".
4.2.1.4.	Add "(See Note A-4.2.1.4.)" after "**4.2.1.4. Determination of the Installed Interior Lighting Power**"; Replace "Except as provided in Sentences (4) and (5)" in Sentence (1) by "Except as provided in Sentence (4)"; Replace Clause (3)(c) by the following: "c) for line-voltage lighting track and plug-in busway designed to allow the addition and/or relocation of luminaires without altering the wiring of the system, the wattage shall be i) the highest value between 98 W for each m of length of the line-voltage lighting track or the plug-in busway and the specified wattage of the luminaires included in the system, ii) the wattage limit of the system's circuit breaker, or iii) the wattage limit of other permanent current-limiting device(s) on the system;"; Replace Clause (3)(d) by the following: "d) the wattage of a low-voltage lighting system shall be the specified wattage of the transformer supplying the system (see Note A-4.2.1.4.(3)(d)), and"; Strike out Clause (4)(h); Replace Clause (4)(k) by the following:

“k) lighting of devices that are for sale or for educational demonstration systems (see Note A-4.2.1.4.(4)(k)),”;

Replace Clauses (4)(o) and (4)(p) by the following:

“o) mirror lighting in dressing rooms,

p) accent lighting in religious pulpit and choir areas,

q) lighting for covered vehicle entrances and exits from *storage garages*, and

r) lighting of work areas integrated to the furniture.”;

Strike out Sentence (5).

4.2.1.5.

Replace the Article by the following:

“**4.2.1.5. Calculation of Interior Lighting Power Allowance Using the Building Area Method**

1) Calculation of the total *interior lighting power allowance* for the space assembly described in Sentence 4.2.1.3.(2) using the *building* area method shall be carried out as follows:

a) the *floor area* shall be determined for that space assembly,

b) the lighting power density (LPD) allowed for the *floor area* determined in accordance with Clause (a) shall be determined from Table 4.2.1.5. for the specific function, and

c) the total *interior lighting power allowance* of the space assembly shall be calculated by multiplying the *floor area* determined in Clause (a) by the allowed LPD determined in Clause (b).

Table 4.2.1.5.
Lighting Power Density (LPD) Allowed According to the Function for Use with the Building Area Method
Forming Part of Sentences 4.2.1.3.(2) and (4) and 4.2.1.5.(1)

Function	Lighting Power Density, W/m²
Automobile facility	8.6
Convention centre	10.9
Courthouse	10.9
Dining:	
bar lounge/leisure	10.9
cafeteria/fast food	9.7
family	10.2
Dormitory	6.1
Exercise centre	9.0
Fire station	7.2
Gymnasium	10.1
Health care clinic	9.7
Hospital	11.3
Hotel/motel	9.4
Library	12.8
Manufacturing facility	12.6

Motion picture theatre	8.2
Multi-unit residential *building*[1]	5.5
Museum	11.0
Office	8.8
Penitentiary	8.7
Performing arts theatre	14.9
Police station	9.4
Post office	9.4
Religious building	10.8
Retail area	13.5
School/university	9.4
Sports arena	9.8
Storage garage	2.3
Town hall	9.6
Transportation facility	7.5
Warehouse	7.1
Workshop	12.8

[1] See Note A-4.1.1.2.(2)(b).”.

4.2.1.6.

Replace Sentence (1) by the following:

“**1)** The total *interior lighting power allowance* for the space assembly described in Sentence 4.2.1.3.(2) using the space-by-space method shall be determined as follows:

a) the *floor area* of each space of the assembly shall be determined,

b) the allowed lighting power density (LPD) for each space shall be determined using Table 4.2.1.6. for the exact space type or a space type that most closely represents the proposed use of each space, except as provided in Sentence (2),

c) the *interior lighting power allowance* for each space shall be calculated by multiplying the *floor area* determined in Clause (a) by the allowed LPD determined in Clause (b), and

d) the total *interior lighting power allowance* of the space assembly shall be calculated by summing the *interior lighting power allowance* determined in Clause (c) for each space.

2) Where the use of a space corresponds to more than one type provided for in Table 4.2.1.6., not dividing the space is permitted provided that the type described in Table 4.2.1.6. represents a *floor area* of

a) less than 20% of the space, for a space having a *floor area* of 1500 m² or less, or

b) less than 300 m², for a space having a *floor area* of more than 1500 m².

3) Increasing by 20% the *interior lighting power allowance* of a space other than an atrium, calculated in accordance with Clause (1)(c), is permitted where the space adjustment factor, AF, calculated using the following equation, is greater than the value referred to in Table 4.2.1.6.:

$$\mathrm{AF} = 2.5 \cdot (\mathrm{H}_1 - \mathrm{H}_2) \cdot \mathrm{L} / \mathrm{S}$$

where

H_1 = height of luminaires in relation to the floor, in m,

H_2 = height of work surface in relation to the floor, in m,

L = perimeter of the *floor area* of the space, in m, and

S = *floor area* of the space, in m².

(See Note A-4.2.1.6.(3).)

4) Increasing by 20% the *interior lighting power allowance* of a corridor or transition area is permitted where the width of the corridor is less than 2.4 m. (See Note A-4.2.1.6.(4).)

5) Where lighting of a portion of a space is controlled by the type of control listed in Table 4.2.1.6. separately from the *general lighting* of the space, increasing the *interior lighting power allowance* of that portion of space by additional power, $P_{additional}$, in W, calculated using the following equation, is permitted:

$$P_{additional} = IILP_{portion} \cdot PI_{LPD}$$

where

$IILP_{portion}$ = *installed interior lighting power* of the portion of the space concerned, in W, and

PI_{LPD} = percentage of increase of allowed LPD indicated in Table 4.2.1.6.

(See Note A-4.2.1.6.(5).)

6) Where decorative lighting or lighting for displaying works of art or artefacts is controlled separately from the *general lighting* of the space, increasing the *interior lighting power allowance* of that portion of space by 10.8 W/m² is permitted. (See Note A-4.2.1.6.(6).)

7) Where lighting for displaying items for sale is controlled separately from the *general lighting* of the space, increasing the *interior lighting power allowance* of that portion of space by additional power $P_{additional}$, in W, calculated using the following equation, is permitted:

$$P_{additional} = 1000\ \mathrm{W} + (A_1 \cdot 27\ \mathrm{W/m^2}) + (A_2 \cdot 15\ \mathrm{W/m^2}) + (A_3 \cdot 6.5\ \mathrm{W/m^2})$$

where

A_1 = areas reserved for displaying jewelry or crockery, including a traffic area having a width of not more than 900 mm, in m²,

A_2 = areas reserved for displaying furniture, clothing, cosmetics or works of art for sale, including a traffic area having a width of not more than 900 mm, in m², and

A_3 = areas reserved for displaying any other item for sale, including a traffic area having a width of not more than 900 mm, in m².

(See Note A-4.2.1.6.(7).)

8) Except for the additional power listed in Sentences (6) and (7), the transfer of unused additional power listed in this Article to increase the *interior lighting power allowance* of another space in accordance with Sentence 4.2.1.3.(2) is permitted.";

Replace Table 4.2.1.6. by the following:

"**Table 4.2.1.6.**
Allowed Lighting Power Density (LPD) for Use with the Space-by-Space Method, Adjustment Factor (AF) and Allowed Additional Lighting Power Density
Forming Part of Sentences 4.2.1.6.(1), (3), (4) and (5), 4.2.2.1.(2), (3), (6), (8), (9), (10), (12) and (14), 4.3.3.1.(1) and (2), and 8.4.3.4.(2)

Space Type	Lighting Power Density (LPD), W/m²	Adjustment Factor (AF)	Percentage of Increase of Allowed LPD (PI_{LPD})[2]	Type of Lighting Control[1]						
				Manual (see 4.2.2.1.(3))	Restricted to Manual ON (see 4.2.2.1.(6))	Restricted to Partial Automatic ON[3] (see 4.2.2.1.(8))	Bi-Level (see 4.2.2.1.(9))	Automatic Partial OFF (see 4.2.2.1.(10))	Automatic Full OFF[4] (see 4.2.2.1.(12))	Scheduled Shut-off (see 4.2.2.1.(14))
Common Space Types [5]										
Atrium										
< 6 m in height	1.06 per m (height)	n/a	10% where C2	X	A	A	–	–	B	B
≥ 6 m and ≤ 12 m in height	1.06 per m (height)	n/a	10% where C2	X	A	A	X	–	B	B
> 12 m in height	4.3 + 0.71 per m (height)	n/a	10% where C2	X	A	A	X	–	B	B
Audience seating area–permanent										
for auditorium	6.8	6	n/a	X	A	A	–	–	B	B
for convention centre	8.9	4	n/a	X	A	A	X	–	B	B
for gymnasium	7.0	6	n/a	X	A	A	X	–	B	B
for motion picture theatre	12.3	4	n/a	X	A	A	X	–	B	B
for penitentiary	3.0	4	n/a	X	A	A	X	–	B	B
for performing arts theatre	26.2	8	n/a	X	A	A	–	–	B	B
for religious building	16.5	4	n/a	X	A	A	X	–	B	B
for sports arena	4.6	4	n/a	X	A	A	X	–	B	B
other	4.6	4	n/a	X	A	A	–	–	B	B

Space Type	Lighting Power Density (LPD), W/m²	Adjustment Factor (AF)	Percentage of Increase of Allowed LPD (PI_{LPD})[2]	Type of Lighting Control[1]						
				Manual (see 4.2.2.1.(3))	Restricted to Manual ON (see 4.2.2.1.(6))	Restricted to Partial Automatic ON[3] (see 4.2.2.1.(8))	Bi-Level (see 4.2.2.1.(9))	Automatic Partial OFF (see 4.2.2.1.(10))	Automatic Full OFF[4] (see 4.2.2.1.(12))	Scheduled Shut-off (see 4.2.2.1.(14))
Banking activity area	10.9	6	n/a	X	A	A	X	–	B	B
Classroom, lecture hall and training room										
for penitentiary	14.5	4	10% where C1 or C2	X	A	A	X	–	X	–
other	13.4	4	10% where C1 or C2	X	A	A	X	–	X	–
Conference, meeting and multi-purpose room	13.3	6	10% where C1 or C2	X	A	A	X	–	X	–
Confinement cell	8.8	6	n/a	X	A	A	X	–	B	B
Copy and print room	7.8	6	n/a	X	A	A	X	–	X	–
Corridor and transition area										
for hospital	10.7	Width < 2.4 m (see 4.2.1.6.(4))	10% where C2	X	–	–	–	B	B	B
for manufacturing facility	4.4	Width < 2.4 m (see 4.2.1.6.(4))	10% where C2	X	–	–	–	–	B	B
for space designed to ANSI/IES RP-28, “Lighting and the Visual Environment for Senior Living,” and used primarily by residents	9.9	Width < 2.4 m (see 4.2.1.6.(4))	10% where C2	X	–	–	–	X	B	B
other	7.1	Width < 2.4 m (see 4.2.1.6.(4))	10% where C2	X	–	–	–	X	B	B
Courtroom	18.6	6	10% where C1 or C2	X	A	A	X	–	B	B

Space Type	Lighting Power Density (LPD), W/m²	Adjustment Factor (AF)	Percentage of Increase of Allowed LPD (PI_{LPD})[2]	Type of Lighting Control[1]						
				Manual (see 4.2.2.1.(3))	Restricted to Manual ON (see 4.2.2.1.(6))	Restricted to Partial Automatic ON[3] (see 4.2.2.1.(8))	Bi-Level (see 4.2.2.1.(9))	Automatic Partial OFF (see 4.2.2.1.(10))	Automatic Full OFF[4] (see 4.2.2.1.(12))	Scheduled Shut-off (see 4.2.2.1.(14))
Dining area										
for bar lounge and leisure dining	11.6	4	10% where C2	X	A	A	X	–	B	B
for cafeteria and fast food dining	7.0	4	10% where C2	X	A	A	X	–	B	B
for family dining	9.6	4	10% where C2	X	A	A	X	–	B	B
for penitentiary	10.3	6	10% where C2	X	A	A	X	–	B	B
for space designed to ANSI/IES RP-28, "Lighting and the Visual Environment for Senior Living," and used primarily by residents	28.5	4	10% where C2	X	A	A	X	–	B	B
other	7.0	4	10% where C2	X	A	A	X	–	B	B
Dressing room for performing arts – theatre	6.6	6	n/a	X	A	A	X	–	X	–
Electrical or mechanical room	4.6	6	124%[6]	X	–	–	–	–	–	–
Emergency vehicle garage	6.1	4	10% where C2	X	A	A	–	–	B	B
Food preparation area	13.1	6	n/a	X	A	A	X	–	B	B
Guest room	5.1	6	n/a	See Sentence 4.2.2.6.(2)						
Laboratory										
for classroom	15.5	6	n/a	X	A	A	X	X	B	B
other	19.5	6	n/a	X	A	A	X	–	B	B

Space Type	Lighting Power Density (LPD), W/m²	Adjustment Factor (AF)	Percentage of Increase of Allowed LPD (PI_{LPD})[2]	Type of Lighting Control[1]						
				Manual (see 4.2.2.1.(3))	Restricted to Manual ON (see 4.2.2.1.(6))	Restricted to Partial Automatic ON[3] (see 4.2.2.1.(8))	Bi-Level (see 4.2.2.1.(9))	Automatic Partial OFF (see 4.2.2.1.(10))	Automatic Full OFF[4] (see 4.2.2.1.(12))	Scheduled Shut-off (see 4.2.2.1.(14))
Laundry/washing area	6.5	4	n/a	X	A	A	X	—	B	B
Loading dock — interior	5.1	6	n/a	X	A	A	—	—	B	B
Lobby										
for elevator	7.0	6	10% where C2	X	—	—	—	—	B	B
for hotel	11.5	4	10% where C2	X	—	—	—	—	B	B
for motion picture theatre	6.4	4	10% where C2	X	—	—	—	—	B	B
for performing arts theatre	21.6	6	10% where C2	X	—	—	—	—	B	B
for space designed to ANSI/IES RP-28, “Lighting and the Visual Environment for Senior Living,” and used primarily by residents	19.4	4	10% where C2	X	—	—	—	X	B	B
other	9.7	4	10% where C2	X	—	—	—	X	B	B
Locker room	8.1	6	n/a	X	A	A	X	—	X	—
Lounge or break room										
for health care facility	10.0	6	n/a	X	A	A	X	—	X	—
other	7.9	4	n/a	X	A	A	X	—	X	—

Space Type	Lighting Power Density (LPD), W/m²	Adjustment Factor (AF)	Percentage of Increase of Allowed LPD (PI_{LPD})[2]	Type of Lighting Control[1]						
				Manual (see 4.2.2.1.(3))	Restricted to Manual ON (see 4.2.2.1.(6))	Restricted to Partial Automatic ON[3] (see 4.2.2.1.(8))	Bi-Level (see 4.2.2.1.(9))	Automatic Partial OFF (see 4.2.2.1.(10))	Automatic Full OFF[4] (see 4.2.2.1.(12))	Scheduled Shut-off (see 4.2.2.1.(14))
Office										
open plan	10.6	4	5% where C1 or C2 25% where C3 30% where C4	X	A	A	X	–	B	B
enclosed, ≤ 25 m²	12.0	8	5% where C1 or C2	X	A	A	X	–	X	–
enclosed, > 25 m²	12.0	8	5% where C1 or C2	X	A	A	X	–	B	B
Pharmacy area	18.1	6	n/a	X	A	A	X	–	B	B
Sales area	15.5	6	n/a	X	A	A	X	–	B	B
Seating area	5.9	4	n/a	X	A	A	–	–	B	B
Server room	18.4	4	n/a	X	A	A	X	–	B	B
Stairway, except stairwell	The control and lighting power density requirements shall be the same as those for the space containing the stairway.									
Stairwell	7.4	10	10% where C2	X	–	–	X	X	B	B
Storage garage – interior	2.1	4	10% where C2	See Article 4.2.2.2.						

Storage room										
< 5 m²	13.3	6	n/a	X	–	–	–	–	B	B
≥ 5 m² and ≤ 100 m²	6.8	6	n/a	X	A	A	–	–	X	–
> 100 m²	6.8	6	n/a	X	A	A	–	X	B	B
Vehicle maintenance area	7.3	4	n/a	X	A	A	X	–	B	B
Washroom										
for space designed to ANSI/IES RP-28, "Lighting and the Visual Environment for Senior Living," and used primarily by residents	13.1	8	n/a	X	–	–	–	–	X	–
other	10.5	8	n/a	X	–	–	–	–	X	–
Workshop	17.2	6	n/a	X	A	A	X	–	B	B
***Building*-Specific Space Types**[5]										
Convention centre – exhibit space	15.7	4	n/a	X	A	A	X	–	B	B
Dormitory – living quarters	4.2	8	n/a	X	–	–	–	–	–	–
Fire station – sleeping quarters	2.4	6	n/a	X	–	–	–	–	–	–
Gymnasium and fitness centre										
exercise area	7.8	4	10% where C2	X	A	A	X	–	B	B
playing area	13.0	4	10% where C2	X	A	A	X	–	B	B
Health care facility										
exam or treatment room	18.0	8	n/a	X	–	–	X	–	B	B
imaging room	16.3	6	n/a	X	–	–	X	–	B	B

medical supply room	8.0	6	n/a	See “Storage Room” under **Common Space Types** for applicable control requirements.						
nursery	9.5	6	n/a	X	–	–	X	–	B	B
nurses’ station	7.6	6	n/a	X	–	–	X	–	B	B
operating room	26.8	6	n/a	X	–	–	X	–	B	B
patient room	6.7	6	n/a	X	–	–	X	–	B	B
physical therapy room	9.9	6	n/a	X	–	–	X	–	B	B
recovery room	12.4	6	n/a	X	–	–	X	–	B	B
Library										
reading area	11.5	4	n/a	X	A	A	X	–	B	B
stacks	18.4	4	n/a	X	A	A	X	X	B	B
Manufacturing facility										
detailed manufacturing area	13.9	4	n/a	X	A	A	X	–	B	B
equipment room	8.0	6	n/a	X	A	A	X	–	B	B
extra high bay area (> 15 m floor-to-ceiling)	11.3	4	n/a	X	A	A	X	–	B	B
high bay area (7.5 m to 15 m floor-to-ceiling height)	13.3	4	n/a	X	A	A	X	–	B	B
low bay area (< 7.5 m floor-to-ceiling height)	12.9	4	n/a	X	A	A	X	–	B	B
Museum										
general exhibition area	11.4	6	n/a	X	A	A	X	–	B	B
restoration room	11.0	6	n/a	X	A	A	X	–	B	B

Post office – sorting area	10.2	4	n/a	X	A	A	X	X	B	B
Religious building										
fellowship hall	6.9	4	n/a	X	A	A	X	–	B	B
worship, pulpit and choir area	16.5	4	n/a	X	A	A	X	–	B	B
Retail facility										
dressing/fitting room	7.7	8	n/a	X	A	A	X	–	X	–
mall concourse	11.9	4	10% where C2	X	A	A	X	–	B	B
Space designed to ANSI/IES RP-28, "Lighting and the Visual Environment for Senior Living"										
chapel used primarily by residents	23.8	4	n/a	X	A	A	X	–	B	B
recreation room used primarily by residents	25.9	6	n/a	X	A	A	X	–	B	B
Sports arena – playing area										
playing area with facilities for more than 5000 spectators	39.7	4	n/a	X	A	A	X	–	B	B
playing area with facilities for more than 2000 spectators and not more than 5000 spectators	25.9	4	n/a	X	A	A	X	–	B	B
playing area with facilities for more than 200 spectators and not more than 2000 spectators	19.4	4	n/a	X	A	A	X	–	B	B

playing area with facilities for less than 200 spectators or without a facility for spectators	13.0	4	n/a	X	A	A	X	–	B	B
Transportation facility										
airport concourse	3.9	4	n/a	X	A	A	–	–	B	B
baggage/carousel area	5.7	4	n/a	X	A	A	–	–	B	B
terminal ticket counter	8.7	4	n/a	X	A	A	X	–	B	B
Warehouse – storage area										
medium to bulky palletized items	6.2	4	n/a	X	A	A	X	X	B	B
small items[7]	10.2	6	n/a	X	A	A	X	X	B	B

(1) n/a: not applicable;
A: at least one of the lighting controls marked with an “A” must be implemented in this space type;
B: at least one of the lighting controls marked with a “B” must be implemented in this space type;
X: all lighting controls marked with an “X” must be implemented in this space type; and
– (dash): this lighting control is not required to be implemented in this space type.

(2) Controls C1 to C4 designate the following controls:
C1: controls lighting using a manual dimmer;
C2: controls lighting using an hourly program for multiple lighting levels;
C3: controls lighting using *occupant sensors*, where the lighting meets the following criteria:
a) the lighting is dedicated exclusively to work stations,
b) the lighting of each work station is independently controlled,
c) the portion of the lighting directed towards the work surface is controlled independently from the portion directed toward the ceiling,
d) the portion of the lighting directed towards the work surface is turned off automatically by continuous dimming devices in the first 30 min of vacancy; dimming for turning off lighting shall last a minimum of 2 min,
e) at the arrival of the occupant, the portion of lighting directed towards the work surface turns on automatically to a first minimum lighting level, then by continuous dimming for at least 30 sec before reaching a preset higher level, and
f) the portion of lighting directed towards the ceiling meets the requirements of Sentence 4.2.2.1.(12);
C4: controls lighting using a C3 control, while permitting manual adjustment of the lighting level by continuous dimming of the lighting directed towards the work station.

(3) Controls meeting the requirements for “Partial Automatic ON” in Sentence 4.2.2.1.(8) also comply with the requirements for “Bi-Level” lighting control in Sentence 4.2.2.1.(9).

(4) Controls meeting the requirements for “Automatic Full OFF” in Sentence 4.2.2.1.(12) also comply with the requirements for “Automatic Partial OFF” lighting control in Sentence 4.2.2.1.(10).

(5) In cases where a space type is listed both as a common space type and a *building*-specific space type, the requirements for the *building*-specific space type apply. See Note A-Table 4.2.1.6.

(6) An additional LPD of 5.7 W/m² is permitted, provided that the additional lighting is separately controlled from the lighting whose allowed LPD is 4.6 W/m².”.

4.2.2.1.	Replace “LPD” in the French text of Sentence (2) by “DPE”; Replace Sentences (10) to (23) by the following: “**10)** Except as provided in Sentence (11), the *general lighting* in spaces requiring controls that are “Automatic Partial OFF” in accordance with Table 4.2.1.6. shall automatically be reduced by 50% or more within 20 min of the space being unoccupied. **11)** *General lighting* need not be controlled in accordance with Sentence (10) where a) the LPD for the space is not greater than 8.6 W/m², b) the space is lit by high-intensity discharge (HID) lamps, and c) the power for the *general lighting* in the space is automatically reduced by 30% or more within 20 min of the space being unoccupied. **12)** Except as provided in Sentence (13), the lighting in spaces requiring controls that are "Automatic Full OFF" in accordance with Table 4.2.1.6. shall be controlled by automatic control devices that shut off the lighting within 20 min of the space being unoccupied, where each automatic control device controls an area not greater than 500 m². **13)** The following lighting applications need not comply with Sentence (12): a) *general lighting* and task lighting in shop and laboratory classrooms, b) *general lighting* and task lighting in spaces where automatic shut-off would endanger the safety or security of the *building* occupants, and c) lighting required to operate continuously due to operational requirements. **14)** Except as provided in Sentence (17), the lighting in spaces requiring controls that are "Scheduled Shut-off" in accordance with Table 4.2.1.6. shall shut off automatically during periods when the spaces are scheduled to be unoccupied by means of control devices complying with Sentence (15) that are a) time-of-day operated to automatically turn the lighting off at programmed times, or b) signals from other automatic control devices or alarm/security systems. **15)** A control device installed to meet the requirements of Sentence (14) shall a) control the lighting for an area of not more than 2500 m² on not more than one floor, and b) consider independently the operation during weekdays, weekends and holidays. **16)** Any manual control device installed to override the “Scheduled Shut-off” control device required in Sentence (14) shall a) turn the lighting on for 2 h or less per activation during scheduled “off” periods, and b) control an area of 500 m² or less. **17)** The control in Sentence (14) is not required where it is a) required to operate continuously due to operational requirements, b) located in spaces where patient care is rendered, or c) located in spaces where automatic shut-off would endanger the safety or security of the *building* occupants.”.
4.2.2.2.	Replace Sentence (2) by the following: “**2)** Except as provided in Sentence (4), the lighting power in a zone referred to in Sentence (1) shall be controlled by a device that automatically reduces the power of each lighting device of the zone by at least 30% when no activity is detected for 20 min. (See Note A-4.2.2.2.(2).)”;

	Replace Sentence (4) by the following: "**4)** Daylight transition zones and ramps without parking need not comply with the provisions of Sentences (1) and (2)."; Strike out Sentence (5).
4.2.2.3.	Strike out the Article.
4.2.2.4.	Strike out the Article.
4.2.2.5.	Strike out the Article.
4.2.2.6.	Replace Sentence (2) by the following: "**2)** Except as provided in Sentence (4), in a hotel or motel *suite*, all the lighting and switched receptables used for lighting shall a) be automatically controlled so that their power supply turns off within the first 20 min of the space being unoccupied using occupant sensors installed in each space, or b) be controlled by a captive key system. (See Note A-4.2.2.6.(2) and (4).)"; Strike out Sentence (3); Replace Sentence (4) by the following: "**4)** In a hotel or motel *suite*, bathrooms shall be equipped with a separate control device installed to automatically turn off the lighting in the bathroom within the first 20 min of the space being unoccupied, except night lighting that does not exceed 5 W. (See Note A-4.2.2.6.(2) and (4).)".
4.2.3.1.	Strike out Sentence (2); Replace Sentences (3) and (4) by the following: "**3)** Except as provided in Sentence (6), the installed *exterior lighting* power for each specific *building* exterior application listed in Table 4.2.3.1.-C that is to be illuminated shall not be greater than the allowance for the application concerned according to the applicable lighting zone plus any unused power from the basic site allowance listed in Table 4.2.3.1.-B. (See Note A-4.2.3.1.(3).) **4)** Except as provided in Sentence (6), the installed *exterior lighting* power for all general *building* exterior applications that are to be illuminated shall not be greater than the sum of the allowances for the applications provided in Table 4.2.3.1.-D according to the applicable lighting zone plus any unused power from the basic site allowance listed in Table 4.2.3.1.-B, the transfer of power between the applications being permitted. (See Note A-4.2.3.1.(4).)"; Replace Table 4.2.3.1.-B by the following:

"**Table 4.2.3.1.-B**
Basic Site Allowances for Exterior Lighting
Forming Part of Sentence 4.2.3.1.(3)

Basic Site Allowance According to Lighting Zone				
Zone 0	Zone 1	Zone 2	Zone 3	Zone 4
0 W	500 W	600 W	750 W	1300 W

";

Replace "retail" in column "Exterior Application" in Table 4.2.3.1.-C by "retail establishment";

Replace Sentence (5) by the following:

"**5)** Except as provided in Sentence (6), the installed *exterior lighting* power shall be determined in the same manner as the *installed interior lighting power* in accordance with Sentences 4.2.1.4.(1) to (3).

6) The power of the following *exterior lighting* applications may not be considered in calculating the power of the installed *exterior lighting* where the lighting is equipped with an independent control device:

a) lighting integral to signal equipment installed by its manufacturer,

b) lighting for athletic activity areas,

c) lighting for industrial production, material handling, transportation sites, and associated storage areas for industrial sites,

d) lighting for theme or amusement elements,

e) lighting used to highlight art objects or monuments,

f) lighting of water fountains,

g) lighting for directional signage devices,

h) lighting integral to equipment or instrumentation where it is installed by its manufacturer,

i) lighting for theatrical purposes, including performance, stage, film and video production,

j) lighting integral to swimming pools,

k) temporary lighting, and

l) lighting for searchlight.".

4.2.4.1.

Replace the Article by the following:

"**4.2.4.1. Exterior Lighting Controls**

1) *Exterior lighting* shall be equipped with automatic shut-off controls based on daylight. (See Note A-4.2.4.1.(1).)

2) *Building facade* and *landscape lighting* shall be equipped with shut-off controls that shut it off automatically for the period

a) beginning not later than midnight or when the *building* closes, and

b) ending no sooner than 6 a.m. or when the building *opens*.

3) *Exterior lighting*, excluding *building facade* and *landscape lighting*, shall be controlled by a device that automatically reduces the installed lighting power by at least 30% according to one of the following conditions:

a) for the period

i) beginning not later than midnight or 60 min after the *building* closes, and

	ii) ending no sooner than 6 a.m. or when the *building* opens, or b) during a 15-min period of inactivity. **4)** Lighting schedule controllers shall be equipped with backup provisions to retain programming and the time setting for at least 10 h during a power outage. **5)** The following *exterior lighting* applications need not comply with the requirements of Sentences (1) to (4): a) *exterior lighting* for covered vehicle entrances and exits from *storage garages*, and b) *exterior lighting* provided for in Clauses 4.2.3.1.(6)(g) to (6)(l).”.
4.3.1.1.	Replace “lighting controls” in Sentence (1) by “photocontrols”.
4.3.1.2.	Replace Sentence (1) by the following: “**1)** *Exterior lighting* and *exterior lighting* controls shall comply with Subsections 4.2.3. and 4.2.4. **2)** *Interior lighting* controls shall comply with Subsection 4.2.2.”.
4.3.1.3.	Replace the Article by the following: “**4.3.1.3. Compliance** **1)** *Interior lighting* shall be deemed to comply with this Section where the installed *interior lighting* energy, IILE, in kW·h/a, of the proposed *building*, calculated in accordance with Subsection 4.3.2., does not exceed the *interior lighting* energy allowance, ILEA, in kW·h/a, calculated in accordance with Subsection 4.3.3.”.
4.3.2.1.	Replace the Article by the following: “**4.3.2.1. Determination of Installed Interior Lighting Energy** **1)** The installed *interior lighting* energy, IILE, in kW·h/a, which is the total annual energy consumption of *interior lighting* in all spaces of the proposed *building,* shall be calculated using the following equation: $$\mathrm{IILE} = \sum_{i=1}^{N} E_{i,\mathrm{proposed}}$$ where N = total number of spaces in the proposed *building,* and $E_{i,proposed}$ = *annual energy consumption* of *interior lighting* in space i, in kW·h/a, calculated in accordance with Sentence (2). **2)** The annual energy consumption of *interior lighting* in a space, $E_{i,proposed}$, in kW·h/a, shall be calculated using the following equation: $$E_{i,\mathrm{proposed}} = \mathrm{LPD}_{i,\mathrm{proposed}} \cdot S_i \cdot t_i / 1000$$ where $LPD_{i,proposed}$ = proposed LPD of the lighting in space i, in W/m², determined in accordance with Article 4.3.2.2., S_i = *floor area* of space i, in m², and t_i = annual operational time of space i, in h/a, determined in accordance with Article 4.3.2.3.”.

4.3.2.2.	Replace Sentence (1) by the following: "**1)** The lighting power density for a space, $LPD_{i,proposed}$, in W/m², shall be calculated using the following equation: $$LPD_{i,proposed} = \frac{P_i}{S_i}$$ where P_i = lighting power in space i, in W, and S_i = *floor area* of space i, in m².".
4.3.2.3.	Replace the Article by the following: "**4.3.2.3. Determination of Operational Times** **1)** The annual operational time of each space, t_i, in h/a, shall be determined from the anticipated operating schedules, by taking into consideration holidays and scheduled shut-off or shut-off attributable to *occupant sensors*. **2)** Where part of a daylighted space is equipped with at least one photocontrol, the reduction of the annual operational time provided for in Sentence (1) is permitted in that part of the space a) from the detailed hourly calculations of daylight and the dynamic response of photocontrols resulting from a digital simulation conducted using specialized tools, or b) by applying the following reduction factors: i) 10% for photocontrols with two control levels, ii) 20% for multi-level photocontrols, or iii) 30% for continuous dimming photocontrols. (See Note A-4.3.2.3.(2).)".
4.3.2.4.	Strike out the Article.
4.3.2.5.	Strike out the Article.
4.3.2.6.	Strike out the Article.
4.3.2.7.	Strike out the Article.
4.3.2.8.	Strike out the Article.
4.3.2.9.	Strike out the Article.
4.3.2.10.	Strike out the Article.

4.3.3.1.	Replace Sentences (1) and (2) by the following: "**1)** The *interior lighting* energy allowance, ILEA, in kW·h/a, which is the maximum allowed *annual energy consumption* of all *interior lighting* complying with the prescriptive LPD determined using the space-by-space method in Article 4.2.1.6. and with the prescriptive lighting controls in Subsection 4.2.2., shall be calculated using the following equation: $$\mathrm{ILEA} = \sum_{i=1}^{N} E_{i,reference}$$ where N = total number of spaces in the proposed *building*, and $E_{i,reference}$ = *annual energy consumption* for lighting in space i, in kW·h/a, calculated in accordance with Sentence (2). **2)** The *annual energy consumption* for lighting in a space, $E_{i,reference}$, in kW·h/a, shall be calculated using the following equation: $$E_{i,reference} = LPD_{i,reference} \cdot S_i \cdot t_i / 1000$$ where $LPD_{i,reference}$ = reference LPD of space i, in W/m², determined in accordance with Article 4.2.1.6., S_i = *floor area* of space i, in m², and t_i = annual operational time in space i, in h/a, determined in accordance with Article 4.3.2.3.".
4.3.3.2.	Strike out the Article.
4.3.3.3.	Strike out the Article.
4.3.3.4.	Strike out the Article.
4.3.3.5.	Strike out the Article.
4.3.3.6.	Strike out the Article.
4.3.3.7.	Strike out the Article.
4.3.3.10.	Strike out the Article.
	Add the following Article: "**4.4.1.2. Limitations** **1)** The *exterior lighting* and the *exterior lighting* controls shall comply with Subsections 4.2.3. and 4.2.4.

	2) The *interior lighting* controls shall comply with Subsection 4.2.2.”.
4.5.1.1.	Replace respectively, in Table 4.5.1.1, in numerical order, the headings, the functional statements and objectives of the following Articles by the following: “**4.2.1.3. Limits to Installed Interior Lighting Power** (1) [F94-OE1.1]”; “**4.2.1.5. Calculation of Interior Lighting Power Allowance Using the Building Area Method** (1) [F94-OE1.1]”; “**4.2.2.1. Interior Lighting Controls** (1) [F94-OE1.1] (2) [F94-OE1.1] (3) [F94-OE1.1] (4) [F94-OE1.1] (6) [F94-OE1.1] (8) [F94-OE1.1] (9) [F94-OE1.1] (10) [F94-OE1.1] (12) [F94-OE1.1] (14) [F94-OE1.1] (16) [F94-OE1.1]”; “**4.2.2.2. Lighting Controls in Storage Garages** (1) [F94-OE1.1] (2) [F94-OE1.1] (3) [F94-OE1.1]”; “**4.2.2.6. Special Applications** (1) [F94-OE1.1] (2) [F94-OE1.1] (4) [F94-OE1.1] (5) [F94-OE1.1]”; “**4.2.3.1. Exterior Lighting** (1) [F94-OE1.1] (3) [F94-OE1.1] (4) [F94-OE1.1]”; “**4.2.4.1. Exterior Lighting Controls** (1) [F94-OE1.1] (2) [F94-OE1.1] (4) [F94-OE1.1]”; “**4.3.1.3. Compliance** (1) [F94-OE1.1]”; “**4.3.2.3. Determination of Operational Times** (1) [F94-OE1.1] (2) [F94-OE1.1]”;

	Strike out the following Articles, functional statements and objectives in Table 4.5.1.1.: “**4.2.1.1. Exit Signs** (1) [F94-OE1.1]”; “**4.2.1.2. Fluorescent Lamp Ballasts** (1) [F94,F98-OE1.1] (2) [F94,F98-OE1.1]”; “**4.2.2.3. Determination of Primary and Secondary Sidelighted Areas** (1) [F94-OE1.1] (2) [F94-OE1.1] (3) [F94-OE1.1] (4) [F94-OE1.1] (5) [F94-OE1.1] (6) [F94-OE1.1] (7) [F94-OE1.1] (8) [F94-OE1.1] (9) [F94-OE1.1]”; “**4.2.2.4. Determination of Daylighted Area Under Roof Monitors** (1) [F94-OE1.1] (2) [F94-OE1.1]”; “**4.2.2.5. Determination of Daylighted Area Under Skylights** (1) [F94-OE1.1] (2) [F94-OE1.1]”; “**4.3.2.4. Determination of Non-Daylighted Area** (1) [F94-OE1.1]”; “**4.3.2.5. Determination of Effective Annual Operational Times** (1) [F94-OE1.1] (2) [F94-OE1.1] (3) [F94-OE1.1]”; “**4.3.2.6. Determination of Operational Times** (1) [F94-OE1.1] (2) [F94-OE1.1]”; “**4.3.2.7. Determination of Factor for Daylight Harvesting** (1) [F94-OE1.1] (2) [F94-OE1.1] (3) [F94-OE1.1] (4) [F94-OE1.1] (5) [F94-OE1.1]”; “**4.3.2.8. Determination of the Daylight Supply Factor for Sidelighting** (1) [F94-OE1.1] (2) [F94-OE1.1] (3) [F94-OE1.1] (4) [F94-OE1.1]”;

	"**4.3.2.9. Determination of the Daylight Supply Factor for Toplighting** (1) [F94-OE1.1] (2) [F94-OE1.1] (3) [F94-OE1.1]"; "**4.3.2.10. Determination of Factors for Occupancy Control and Personal Control** (1) [F94-OE1.1] (2) [F94-OE1.1] (3) [F94-OE1.1]"; "**4.3.3.2. Determination of Lighting Power Density** (1) [F94-OE1.1]"; "**4.3.3.3. Determination of Daylighted Area** (1) [F94-OE1.1]"; "**4.3.3.4. Determination of Non-Daylighted Area** (1) [F94-OE1.1]"; "**4.3.3.5. Determination of Effective Annual Operational Times** (1) [F94-OE1.1] (2) [F94-OE1.1] (3) [F94-OE1.1]"; "**4.3.3.7. Determination of Factor for Daylight Harvesting** (1) [F94-OE1.1] (4) [F94-OE1.1] (5) [F94-OE1.1]"; "**4.3.3.10. Determination of Factors for Occupancy Control and Personal Control** (1) [F94-OE1.1] (2) [F94-OE1.1]".
Division B Part 4 Schedule A	
	Add the following Note: "**A-4.1.1.2.(2)(b) Application to Dwelling Units.** The interior lighting of dwelling units need not comply with the requirement of Part 4. The interior lighting of common parts of a building with dwelling units is not covered by the exclusion of that Clause and shall comply with the requirements of Part 4.".
A-4.1.1.2.(2)(c)	Strike out the Note.
A-4.1.1.3.(1)	Replace the Note by the following: "**A-4.1.1.3.(1) Compliance.** The flow chart in Figure A-4.1.1.3.(1) illustrates the process for all three paths of compliance applicable to Part 4. The prescriptive path options for interior lighting requirements using the building area method or the space-by-space method are also shown in Figure A-4.1.1.3.(1). Certain

requirements apply regardless of the path of compliance chosen, for example, the requirements for exterior lighting and the calculation of the lighting power.

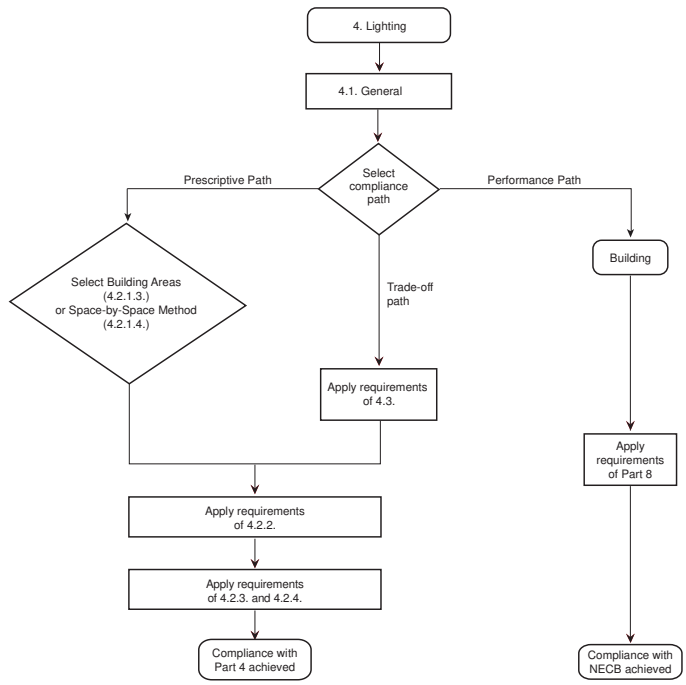

Figure A-4.1.1.3.(1)

Code compliance paths for lighting".

A-4.2.1.3.

Replace the Note by the following:

"**A-4.2.1.3. Prescriptive Compliance with Interior Lighting Power Requirements.** The prescriptive criteria in Subsection 4.2.1. compare the installed interior lighting power to a permitted interior lighting power allowance. For calculating the permitted interior lighting power allowance, two methods are proposed, i.e. the building area method and the space-by-space method.

The building area method is based on the functions in the building and has limited flexibility. The criteria are not sensitive to type of space and room configurations, which is permitted by the space-by-space method. The building area method permits faster calculations for buildings with common functions. That method is appropriate for projects whose function is not specifically determined in the plans and specifications.

The space-by-space method provides greater flexibility but requires a more detailed calculation procedure. It provides for each space a more appropriate interior lighting power allowance better adapted to complex buildings or buildings with multiple spaces for multiple activities.

The building area and space-by-space methods are not to be used, in the building design, to determine room illuminance levels. The designer is required to design a lighting system that will create an environment sufficiently lighted without exceeding the interior lighting power allowance.

For a building with a single function, such as an elementary school, the designer may use the building area method by ensuring that the total installed interior lighting

	power complies with the interior lighting power allowance. The latter would be 9.4 W/m² multiplied by the floor area of the school. The designer may also decide to use the space-by-space method by dividing the building area: classrooms, corridors, washrooms, gymnasium, cafeteria, etc. The designer will then ensure that the total installed interior lighting power complies with the total interior lighting power allowance calculated using the space-by-space method. For a building with several suites, for example, retail stores in a mall, the designer may use either methods for each suite or only one method by grouping the suites into the same space assemblies in accordance with Sentence 4.2.1.3.(6). (See Note A-4.2.1.3.(6).) Note that, for flexibility in design, the trade-off path detailed in Section 4.3. or the performance path described in Part 8 may be followed in lieu of the prescriptive requirements stated in Section 4.2.".
	Add the following Notes: "**A-4.2.1.3.(5) Power Transfer of Interior Lighting Allowance not Used Between Several Spaces in the Same Space Assemblies.** For a building with a single function, such as a library, the total interior lighting power allowance is determined using the building area method from an LPD of 12.8 W/m² as provided in Table 4.2.1.5. In that case, the washrooms could have an installed LPD greater than 12.8 W/m², provided that the total installed interior lighting power of the library is less than 12.8 W/m². Similarly, if the interior lighting power allowance of the library were determined using the space-by-space method described in Article 4.2.1.6., the washrooms could have an LPD greater than the 10.5 W/m² provided in Table 4.2.1.6., provided that the total interior lighting power allowance of the library is not exceeded. **A-4.2.1.3.(6) Power Transfer of Interior Lighting Allowance not Used Between Several Space Assemblies.** In a building with several space assemblies, the unused portion of the interior lighting power allowance may be transferred from one assembly to the other. For example, in a commercial building with several suites having different functions, transfer of the unused portion of the interior lighting power allowance is permitted. The transfer may only take place in the conditions described in Sentence 4.2.1.3.(6). **A-4.2.1.4. Spaces to Consider to Determine Installed Interior Lighting Power.** The spaces to be considered to determine the installed interior lighting power are defined in the definition for interior lighting. (See Article 1.4.1.2. and Note A-1.4.1.2. of Division A.)".
A-4.2.1.4.(2)	Replace the Note by the following: "**A-4.2.1.4.(2) Installed Interior Lighting Power.** For a particular space, the installed interior lighting power must also include the power of moveable plug-in units provided in the design, as indicated in Clause 4.2.1.4.(2)(a), while considering the exclusions provided in Sentence 4.2.1.4.(4). Recognizing that moveable plug-in units are moved, plugged in, unplugged and easily replaced over time, the lighting power of those units is not intended to reflect the actual connected lighting power of those units over the life of the space. Rather, it is to indicate a power level that will support a lighting level appropriate for the intended use of the space. Thus, where the design calls for moveable or plug-in luminaires, the designer must select a sufficient quantity of luminaires to provide the necessary lighting level. The installed interior lighting power must include the lighting load for the installation of those typical units. Where several lighting systems are controlled to ensure independently several levels of lighting, the system with the highest lighting power must be included in the calculation of the installed interior lighting power.

	For example, in a meeting room with a first system for subdued lighting for the use of a projector and a second lighting system for tables, where the controls of the two lighting systems do not allow their simultaneous illumination, Clause 4.2.1.4.(2)(b) allows to consider only the highest power between the two systems to calculate the installed lighting power.”.
	Add the following Notes: “**A-4.2.1.4.(3)(d) Low-Voltage Lighting Systems.** Low-voltage lighting systems include low-voltage lighting tracks that allow the addition and/or relocation of luminaires without altering the wiring of the system. Lighting tracks called “low-voltage” are generally supplied with 12 or 24-V direct current and differ from “line-voltage” lighting tracks described in Clause 4.2.1.4.(3)(c), that are generally supplied with 120 or 347-V alternating current. **A-4.2.1.4.(4)(k) Commercial Demonstration Lighting.** That lighting designates the lighting devices and accessories that are intended to be sold to the public (e.g. in a luminaire store) and does not include accent lighting for a commercial shop window, which is covered in Clause 4.2.1.4.(4)(g).”.
A-4.2.1.5.	Strike out the Note.
	Add the following Notes: “**A-4.2.1.6.(3) Adjustment Factor of Luminaires Positioned High.** The height of the luminaires, H_1, used in calculating the adjustment factor, AF, must correspond to the height of the light source. Where luminaires are not built in the ceiling, the designer must assess their heights in relation with the floor. The exchange of the unused portion of the increased interior lighting power allowance for those of the other spaces in accordance with Sentence 4.2.1.6.(8) is permitted. **A-4.2.1.6.(4) Additional Power of Luminaires Positioned in Corridors or Transition Areas.** The LPD in Table 4.2.1.6. concerning corridors are determined for corridors 2.4 m wide or more. For widths less than 2.4 m, the reflectance of the light on the walls increases and requires that the designer increase the lighting power to maintain a sufficient lighting level. The exchange of the unused portion of the increased power allowances for those of the other spaces in accordance with Sentence 4.2.1.6.(8) is permitted. **A-4.2.1.6.(5) Additional Power Due to Controls.** In certain conditions, increasing the interior lighting power allowance based on the addition of the controls referred to in Table 4.2.1.6 is permitted. Those controls are in addition to those required in Subsection 4.2.2. The exchange of the unused portion of the increased power allowances for those of the other spaces in accordance with Sentence 4.2.1.6.(8) is permitted. **A-4.2.1.6.(6) Additional Power Due to Decorative Lighting or Display Lighting for Art Work.** Although under Clause 4.2.1.4.(4)(a), lighting in museums or art galeries for the display of art work or artefacts is excluded from the calculation of installed power, the additional power due to display lighting applies to all functions that are not museums or art galeries. For example, lighting of a floor area occupied by the statue of an athlete at the entrance of an arena will not be excluded from the calculation of the power by Clause 4.2.1.4.(4)(a), and could be increased by 10.8 W for each m^2 of floor area occupied by the statue. The additional power due to decorative lighting or display lighting for art work is not permitted where the lighting concerned only contributes to the general lighting of the

	space. For example, where the only source of lighting in a 100 m² corridor are wall luminaires, the luminaires are not eligible for additional lighting due to decorative lighting because the wall luminaires do not have a decorative function but are only intended for the general lighting of the corridor. According to Table 4.2.1.6., the LPD allowance for that 100 m² corridor must not exceed 7.1 W/m² and the interior lighting power allowance for wall luminaires of the corridor will therefore be 710 W. As provided in Sentence 4.2.1.6.(8), the exchange of the unused portion of those powers against those of other spaces is not permitted. **A-4.2.1.6.(7) Additional Power Due to Display Lighting of Items for Sale.** Areas due to display lighting of items for sale only rarely correspond to the full floor area of the space considered; they are only constituted of areas occupied by the display cases concerned and an immediate traffic area around the cases. Where the lighting only contributes to the general lighting of the space, Sentence 4.2.1.6.(7) does not allow the increase of the interior lighting power allowance. As provided in Sentence 4.2.1.6.(8), the exchange of the unused portion of those powers for those of the other spaces is not permitted.”.
A-Table 4.2.1.6.	Replace the Note by the following: “**A-Table 4.2.1.6. Building Space Types.** **Common and Building-Specific** In some cases, a space can be described as both a common space type and a building-specific space type. For example, the medical supply room in a health care facility could also be a storage room. In such case, the building-specific space type “medical supply room” must be used. **Warehouse** In a warehouse storage area, the space used to store small hand-carried items is sometimes referred to as a “picking area.””.
A-4.2.2.1.(11) and (14)	Strike out the Note.
	Add the following Note: “**A-4.2.2.2.(2) Reduction of the Power During Unoccupied Periods in a Storage Garage.** To ensure user safety, uniform lighting is necessary in the garage. For that reason, the power must be reduced on each lighting unit rather than by turning off one unit out of three, for example.”.
A-4.2.2.3.	Strike out the Note.
A-4.2.2.3.(1) and (5)	Strike out the Note.
A-4.2.2.4.	Strike out the Note.

A-4.2.2.4.(1) and 4.2.2.5.(1)	Strike out the Note.
A-4.2.2.4.(2)	Strike out the Note.
A-4.2.2.5.(2)	Strike out the note.
	Add the following Note: "**A-4.2.2.6.(2) Captive Key.** A captive key system turns on the lighting and receptacles when the key of the suite is inserted in the reader. When the key is removed from the reader, the lighting and receptacles turn off.".
A-4.2.2.6.(2) and (4)	Strike out the Note.
A-4.2.3.1.(3)	Replace "la puissance admissible du site de base" in the French text by "la puissance d'allocation du site de base".
A-4.2.3.1.(4)	Replace the Note by the following: "**A-4.2.3.1.(4) Transferable Power Allowance for General Exterior Applications.** It is possible to transfer the power allowance of the lighting among each of the applications listed in Table 4.2.3.1.-D. The difference between the power allowance and the installed power of an application may permit the increase of the power allowance of another lighting application. It is also possible to increase the power allowance of the applications with all or part of the basic site allowance of the exterior lighting.".
	Add the following Note: "**A-4.2.4.1.(1) Shut-off Controls of Exterior Lighting During the Day.** It is possible to comply with the requirement, for example, by using photocontrolled breakers or an annual detailed program ensuring the automatic turning off of exterior lighting in the presence of daylight.".
A-4.3.2.3.(2)	Replace the Note by the following: "**A-4.3.2.3.(2) Specialized Daylight Simulation Tools.** A specialized daylight simulation tool allows the modeling of • radiosity, • ray tracing, • hourly distribution of diffused light sources, such as the sky, • direct light sources, such as the sun, and • photocontrol operation parameters. Where applicable, the specialized daylight simulation tool must also model the operation of concealment devices, such as sun breakers, designed to prevent glare for occupants.

	The reduction of the operational time provided in Sentence 4.3.2.3.(2) applies to lighting controlled by photocontrols and not to all the lighting of a space.”.
A-Table 4.3.2.8.	Strike out the Note.
A-4.3.3.7.(4)	Strike out the Note.
Division B Part 5	
5.1.1.1.	Replace “heating, ventilating and air-conditioning” in Sentence (1) by “*HVAC systems”*.
5.1.1.2.	Replace “to heating, ventilating and air-conditioning systems and equipment” in Sentence (1) by “to *HVAC systems”*; Replace Sentence (2) by the following: “**2)** Unless otherwise provided in this Part and subject to Sentence (4), this Part does not apply to *HVAC systems* a) serving rooms in which the processes or activities call for temperatures, airflow rates or humidity levels outside the normal range required for comfort, or b) dedicated entirely to a process or activity calling for temperatures, airflow rates or humidity levels outside the normal range required for comfort. (See Note A-5.1.1.2.(2) and (4).)”; Replace “systems” in Sentence (3) by “*HVAC systems”*; Add the following Sentence: “**4)** An *HVAC system* serving both rooms referred to in Sentence (2) and rooms calling for conditions within the normal range required for comfort must comply with this Part. (See Note A-5.1.1.2.(2) and (4).)”.
5.1.1.3.	Replace Sentence (1) by the following: “**1)** Except as provided in Sentence (2), compliance with this Part shall be achieved by following a) the prescriptive path described in Section 5.2., or b) the performance path described in Section 5.4. (see Note A-3.1.1.3.(1)(c)). (See Note A-5.1.1.3.(1).)”.
5.2.1.	Replace the heading by the following: “**5.2.1. Sizing**”.
5.2.1.1.	Replace Sentence (1) by the following:

	"**1)** *HVAC systems* shall be sized in accordance with the NBC. (See Note A-5.2.1.1.(1).)".
5.2.2.1.	Replace the Article by the following: "**5.2.2.1. Design, Construction and Installation of Ducts** **1)** Air distribution systems shall be designed, constructed and installed in accordance with the NBC. (See Note A-5.2.2.1.(1).)".
5.2.2.3.	Replace the Article by the following: "**5.2.2.3. Duct Sealing** **1)** Except as provided in Sentences (2) and (6), air-handling ducts and *plenums* forming part of an *HVAC system* shall be sealed like a Class A duct within the meaning of ANSI/SMACNA 006, "HVAC Duct Construction Standards – Metal and Flexible." (See Note A-5.2.2.3.(1).) **2)** *Return ducts* located within *conditioned space* or in spaces used as return air *plenums* need not comply with Sentence (1). **3)** Sealing tape shall not be used as the primary sealant for a section of air-handling duct or *plenum* at a static pressure of at least 250 Pa. **4)** The joints of air-handling ducts and *plenums* shall have mechanical fasteners and be assembled so that no mechanical effort is transmitted to the sealant. **5)** Sealing tape used to seal air-handling ducts and *plenums* shall comply with UL 181A, "Closure Systems for Use with Rigid Air Ducts," or UL 181B, "Closure Systems for Use with Flexible Air Ducts and Air Connectors." **6)** A suspended ceiling void used as return air *plenum* need not be sealed in accordance with this Article.".
5.2.2.4.	Replace the Article by the following: "**5.2.2.4. Leakage Testing of Ducts** **1)** The following air-handling ducts and *plenums* shall be tested for leakage in conformance with ANSI/SMACNA 016, "HVAC Air Duct Leakage Test Manual," and comply with the maximum permitted leakage calculated in accordance with Sentence (2): a) air-handling ducts and *plenums* designed to operate at a static pressure of more than 750 Pa, and b) air-handling ducts and *plenums* located outside of the *building envelope*. **2)** The maximum permitted leakage of air-handling ducts and *plenums* tested as described in Sentence (1) shall be calculated as follows: $$L_{max} = C_L \cdot \left(\frac{P}{249}\right)^{0.65}$$ where L_{max} = maximum permitted leakage, in L/s per m² of duct surface area or *plenum*, C_L = leakage class taken from Table 5.2.2.4., in L/s per m², and P = maximum operating static pressure, in Pa. **Table 5.2.2.4.** **Leakage Classes (C_L)** Forming Part of Sentence 5.2.2.4.(2)

Shape of Air-handling Ducts and *Plenums*	Maximum Operating Static Pressure, Pa	
	750 to 1000	> 1000

	C_L, in L/s per m²	
Rectangular	0.41	0.20
Round	0.20	0.10

3) The tests described in Sentence (1) shall

a) include the sections where leakage is predominant, such as sections with elbows, and

b) be performed over a minimum of 25% of the total surface area of the ducts and *plenums* referred to in Sentence (1).".

5.2.2.5.

Replace Sentence (1) by the following:

"**1)** Except as provided in Sentence (3), all air-handling ducts and *plenums* forming part of an *HVAC system* shall be thermally insulated in accordance with Table 5.2.2.5.";

Replace Table 5.2.2.5. by the following:

"**Table 5.2.2.5.**
Insulation of Ducts and *Plenums*
Forming Part of Sentences 5.2.2.5. (1) and (2) and 5.2.4.2. (3)

Temperature Difference,[1] °C	Minimum Thermal Resistance of Insulation of Ducts not Exceeding 3 m in Length that Connect to Terminal Grilles or Diffusers, m²·°C/W	Minimum Thermal Resistance of Insulation of *Plenums* and Other Ducts, m²·°C/W
< 5	0	0
5 to < 22	0.74	0.74
22 to < 29	0.74	1.06
29 to < 43	0.74	1.41
> 43	1.41	2.11

[1] Refers to the temperature difference at design conditions between the space within which the duct or *plenum* is located and the design temperature of the air carried by the same duct or *plenum*. Where the duct or *plenum* is located outside the *building envelope,*

- if used for heating purposes, the temperature difference shall be calculated using the 2.5% January design temperature of Table C-1, or
- if used for cooling purposes, the temperature difference shall be calculated using the 2.5% July design dry-bulb temperature of Table C-1.

Where a duct or *plenum* is used for both heating and cooling purposes, the larger temperature difference shall be used.";

Replace Sentences (3) to (8) by the following:

"**3)** The following air-handling ducts and *plenums* need not comply with the requirements of Sentence (1):

a) e*xhaust ducts, return ducts* and air *supply ducts* located within *conditioned space*, except as provided in Sentence 5.2.4.2.(3),

b) ducts and *plenums* located within *conditioned space* in a *dwelling unit* and serving only that *dwelling unit*,

c) air *supply ducts* located within return *plenums*,

d) provided they are insulated with a material having thermal resistance of at least 0.74 m²·°C/W:

i) *exhaust ducts* crossing a space other than *conditioned space*,

	ii) *exhaust ducts* separated from *conditioned space* by an insulated *building assembly* in accordance with Subsection 3.2., and iii) ducts in which outdoor air not heated and not mixed to indoor air circulates, where they cross *conditioned space*.”.
5.2.2.7.	Replace the Article by the following: “**5.2.2.7. Cooling with Outdoor Air** **1)** Except as provided in Sentence (2), each *HVAC system* that incorporates mechanical cooling shall be designed to use outdoor air to reduce mechanical cooling energy by one of the means covered in Articles 5.2.2.8. and 5.2.2.9. **2)** An *HVAC system* need not comply with the requirements of Sentence (1) where a) it has a total cooling capacity less than 16 kW, b) it serves only server rooms and has a total cooling capacity less than 40 kW, c) it serves only a *dwelling unit* or a hotel or motel *suite*, d) it has a non-particle filtration system (see Note A-5.2.2.7.(2)(d)), e) it serves a hospital, provided that more than 75% of the distributed air is humidified at a wet-bulb temperature greater than 2°C, f) it recovers heat on the mechanical cooling equipment (see Note A-5.2.2.7.(2)(f)), g) it serves spaces maintained at a temperature of at least 26°C during operating hours (see Note A-5.2.2.7.(2)(g)), h) it is intended to operate or work according to operating hours of less than 20 h per week, or i) it distributes air using at least 80% of outdoor air. **3)** Except as provided in Sentence (2), the economizer system shall be integrated to a mechanical cooling system so that a) the mechanical cooling be inactive when the economizer system can ensure alone all the cooling charge, and b) the mechanical cooling is partially activated when the economizer system cannot ensure alone all the cooling charge. (See Note A-5.2.2.7.(3).) **4)** Except as provided in Sentence (2), an *HVAC system* must at least use a water economizer system in accordance with Article 5.2.2.9 when the *HVAC system* includes a) a water loop mechanical cooling, and b) a humidification system that maintains indoor humidity at a wet-bulb temperature greater than 2°C.”.
5.2.2.8.	Italicize “HVAC systems” in Sentence (1); --- Replace Sentences (2) to (6) by the following: “**2)** Each system described in Sentence (1) shall a) be designed to automatically reduce the outdoor airflow to the minimum prescribed by the NBC to maintain acceptable indoor air quality when the use of outdoor air no longer allows the reduction of the cooling energy according to the conditions described in Table 5.2.2.8-A, b) be controlled by only one of the types of controls provided for in Table 5.2.2.8.-A, and

c) stop the direct use of outdoor air for cooling when any of the conditions resulting in the shut-off provided for in Table 5.2.2.8.-A is met.

(See Note A-5.2.2.8.(2).)

Table 5.2.2.8.-A
High-Limit Shut-off Control of Direct Use of Outdoor Air
Forming Part of Sentence 5.2.2.8.(2)

Type of Setting	Conditions Resulting in Shut-off	
	Parameters[1]	Description
Fixed dry bulb	T_{OA} > 21°C when HDD under 18°C < 6000	Outdoor air temperature exceeds 21°C in a locality where the number of degree-days under 18°C is under 6000
	T_{OA} > 24°C when HDD under 18°C ≥ 6000	Outdoor air temperature exceeds 24°C in a locality where the number of degree-days under 18°C is at least 6000
Differential dry bulb	$T_{OA} > T_{RA}$	Outdoor air temperature exceeds return air temperature
Fixed enthalpy with fixed dry bulb	H_{OA} > 47 kJ/kg or T_{OA} > 24°C	Outdoor air enthalpy exceeds 47 kJ/kg or outdoor air temperature exceeds 24°C
Differential enthalpy with fixed dry bulb	$H_{OA} > h_{RA}$ or T_{OA} > 24°C	Outdoor air enthalpy exceeds return air enthalpy or outdoor air temperature exceeds 24°C

(1) T_{OA} = temperature outdoor air,
T_{RA} = temperature return air,
h_{OA} = enthalpy outdoor air,
h_{RA} = enthalpy return air.

3) Except as provided in Sentence (4), an *HVAC system* including a *supply air handler* whose mechanical cooling is direct expansion shall have at least 2 cooling stages when the mechanical cooling

a) is integrated to cooling by direct use of outdoor air as described in Sentence (1),

b) has a total cooling capacity of more than 18 kW, and

c) is directly controlled from the space temperature.

(See Note A-5.2.2.8.(3).)

4) When an *HVAC system* including a *supply air handler* has direct expansion mechanical cooling in compliance with Table 5.2.2.8-B, that system need not comply with Sentence (3). (See Note A-5.2.2.8.(4).)

Table 5.2.2.8.-B
Minimum Number of Direct Expansion Mechanical Cooling
Forming Part of Sentence 5.2.2.8.(4)

Cooling Capacity [1]	Minimum Number of Mechanical Cooling Stages	Minimum Displacement of the First Cooling Stage [1]
≥ 18 kW and < 70 kW	3	≤ 33% of the total cooling capacity
≥ 70 kW	4	≤ 25% of the total cooling capacity

(1) The values of the cooling capacity and minimum displacement of the first cooling stage apply to a variable-speed compressor.”.

5.2.2.9.

Add the following line after “**5.2.2.9. Cooling by Indirect Use of Outdoor Air (Water Economizer System)**”:

“(See Note A-5.2.2.9.)”;

	Italicize “HVAC systems” in Sentences (1) and (2).
5.2.3.1.	Replace the Article by the following: “**5.2.3.1. Application** (See Note A-5.2.3.1. and 5.2.6.) **1)** This Subsection applies to all fans of *HVAC systems* used alone or in a combination where the total rated capacities described in Sentence (4) are at least 4 kW. (See Note A-5.2.3.1.(1), (2) and (3).) **2)** Except as provided in Sentence (3), the total of the rated capacities and the total of the brake horsepower of the fans of *HVAC systems* shall only include the fans that operate at design conditions requiring the highest capacity to supply air to the *conditioned space*. (See Note A-5.2.3.1.(1), (2) and (3).) **3)** The following fans may not be included in the total rated capacities provided for in Sentence (4) and in the total brake horsepower provided for in Sentence (5): a) an independent exhaust fan whose motor rated capacity is not more than 750 W, b) an exhaust or transfer fan that serves spaces other than *conditioned spaces*, and c) a fan that dissipates the heat of an *HVAC system* located outside the *building envelope*, such as a condenser or a cooling tower fan. (See Note A-5.2.3.1.(1), (2) and (3).) **4)** For the purposes of this Subsection, the total of the rated capacities of the fans of *HVAC systems*, TRC, in W, shall be the sum of the nameplate ratings of each motor. **5)** For the purposes of this Subsection, the total brake horsepower of the fans of *HVAC systems*, TBHP, in W, is the sum of the brake horsepower of each fan established a) according to the curves or tables provided by the fan manufacturers, or b) using the following equation: $$\mathrm{TBHP} = 0.001 \cdot \sum_{i=1}^{n} (D_i \cdot PS_i / \eta_i)$$ where n = number of fans, D_i = design flow rate of the ith fan, in L/s, PS_i = design static pressure difference between both sides of the ith fan, in Pa, and η_i = efficiency of the ith fan, expressed as a decimal fraction. **6)** For the purposes of Clauses 5.2.3.2.(1)(b) and 5.2.3.3.(1)(b), the values of the static pressure adjustment, SPA_i, in Pa, are those stated in Table 5.2.3.1.

Table 5.2.3.1.
Fan Design – Static Pressure Adjustment, SPA_i, in Pa
Forming Part of Sentences 5.2.3.1.(6), 5.2.3.2.(1), 5.2.3.3.(1), 8.4.3.6.(4) and 8.4.4.18.(4)

Description	**Positive Adjustment**[1]
All completely channelled return ducts and exhaust ducts of the *HVAC system*[2]	For a laboratory and vivarium *HVAC system*: + 535 Pa For other *HVAC system*: + 125 Pa
Pressure control damper installed in a *return duct* and/or exhaust duct[2]	For each damper: + 125 Pa
Filter on the *exhaust duct*, scrubber or other air treatment device on the *exhaust duct*	For each filter or device: + pressure loss value provided by the manufacturer at design conditions

Particle filter with a MERV[3] efficiency included between 9 and 15	For each filter: + (28.5 · MERV) – 174 Pa
Particle filter with a MERV ≥ 16 efficiency or electrostatic filter	For each filter: + double the pressure loss value provided by the manufacturer at design conditions
Carbon air purifier or using another gas phase	For each purifier: + pressure loss value provided by the manufacturer at design conditions
Biological safety cabinet	For each cabinet: + pressure loss value provided by the manufacturer at design conditions
Heat or energy recovery unit, except coil heat recovery systems	For each airflow rate of the recovery unit: + (550 · recovery efficiency[4]) – 125 Pa
Coil heat recovery system	For each airflow rate of the recovery system: + 150 Pa
Humidifier or evaporative cooler in series with another cooling coil	For each humidifier or cooler: + pressure loss value provided by the manufacturer at design conditions
Sound absorbing section	For each section: + 38 Pa
Exhaust equipment for hoods	For each equipment: + 85 Pa
Exhaust ducts installed in high *buildings* for laboratory and vivarium hoods	For each 30-m section of vertical duct, except the first 25 vertical metres: + 60 Pa
Natural gas or propane heat pump or *supply air handler*	For *HVAC system*: + 50 Pa
Description	**Negative Adjustment**[1]
HVAC system without cooling equipment in the *supply air handler*	For the *HVAC system*: – 150 Pa
HVAC system without heating equipment in the *supply air handler*	For the *HVAC system*: – 75 Pa

(1) See Note A-Table 5.2.3.1.
(2) Static pressure adjustments in the air distribution system are included in the equations provided for in Clauses 5.2.3.2.(1)(b) and 5.2.3.3.(1)(b).
(3) MERV means "minimum efficiency reporting value;" it is a measurement scale to rate the effectiveness of air filters.
(4) Recovery unit efficiency established according to Sentence 5.2.10.1.(5)."**.**

5.2.3.2.

Replace Sentence (1) by the following:

"**1)** Except as provided in Sentence (2), where fans produce a constant airflow rate,

a) the total of the rated capacities provided for in Sentence 5.2.3.1.(4), TRC, in W, shall not exceed the total allowable rated capacities, TARC, in W, established using the following equation:

$$\mathrm{TARC} = \mathrm{D_a} \cdot 1.61$$

where

D_a = air supply design flow rate, in L/s, or

b) the total of the brake horsepower provided for in Sentence 5.2.3.1.(5), TBHP, in W, shall not exceed the total allowable brake horsepower, TABHP, in W, established using the following equation:

$$\mathrm{TABHP} = \mathrm{D_a} \cdot 1.42 + \sum_{i=1}^{n} (\mathrm{D_i} \cdot \mathrm{SPA_i}/650)$$

where

D_a = air supply design flow rate, in L/s,

n = number of equipments requiring a static pressure adjustment,

D_i = flow from i^{th} equipment requiring a static pressure adjustment, in L/s (see Sentence 5.2.3.1.(5)), and

	SPA_i = static pressure adjustment of ith equipment, in Pa (see Sentence 5.2.3.1.(6)). (See Note A-5.2.3.2.(1).) **2)** Constant-flow fan systems used for hospitals, vivariums or laboratories and whose exhaust or return flow is controlled to maintain a specific pressure for health or safety reasons may use the limits of a variable volume fan. (See Note A-5.2.3.2.(2).)".
5.2.3.3.	Replace the Article by the following: "**5.2.3.3. Variable-Air-Volume Fan Systems** (See Note A-5.2.3.3.) **1)** In the case of fans automatically varying the airflow rate based on static pressure, a) the total of the rated capacities provided for in Sentence 5.2.3.1.(4), TRC, in W, shall not exceed the total allowable rated capacities, TARC, in W, established using the following equation: $$\mathrm{TARC} = \mathrm{D_a} \cdot 2.31$$ where D_a = air supply design flow rate, in L/s, or b) the total of the brake horsepower provided for in Sentence 5.2.3.1.(5), TBHP, in W, shall not exceed the total allowable brake horsepower, TABHP, in W, established using the following equation: $$\mathrm{TABHP} = \mathrm{D_a} \cdot 2.02 + \sum_{i=1}^{n} (\mathrm{D_i} \cdot \mathrm{SPA_i}/650)$$ where D_a = air supply design flow rate, in L/s, n = number of equipments requiring a static pressure adjustment, D_i = flow from i^{th} equipment requiring a static pressure adjustment, in L/s (see Sentence 5.2.3.1.(5)), and SPA_i = static pressure adjustment of ith equipment, in Pa (see Sentence 5.2.3.1.(6)). **2)** In variable-air-volume *HVAC systems*, every supply, discharge or return fan whose rated capacity is at least 7.4 kW shall operate at not more than 30% of its power demand at design conditions where the fan provides 50% of the air design flow rate. (See Note A-5.2.3.3.(2).) **3)** Except as provided in Sentence (4), static pressure sensors used to control a variable-air-volume supply fan shall be a) located so that the static pressure setpoint is not more than 300 Pa, and b) installed downstream from the fan, i) in the main supply duct before any intersection, or ii) in each intersection of a main supply duct. (See Note A-5.2.3.3.(3).) **4)** The static pressure setpoint of an *HVAC system* supply duct shall be adjusted to the value of the *conditioned space* requiring the highest static pressure when the following conditions are met: a) all the *conditioned spaces* of the *HVAC system* are individually served by powered boxes, b) a direct digital control system is installed on the powered box of each *conditioned space*, and

c) each direct digital control system is centralized on the supply fan main control panel.

(See Note A-5.2.3.3.(4).)

5) The main control panel referred to in (4)(c) shall

a) measure the opening degree of each powered box,

b) signal powered boxes that remain open the longest, and

c) permit the manual removal of the control logic of the powered boxes referred to in Clause (b) to maximize the setpoint readjustment potential.”.

5.2.3.4. Strike out the Article.

5.2.4.1. Italicize “HVAC systems” in Sentence (3);

Replace Sentence (4) by the following:

“**4)** Where the duct or opening does not exceed 0.08 m², air intake and air exhaust dampers required by Sentence (1) are permitted to be gravity or spring-operated backflow dampers.”.

5.2.4.2. Italicize “HVAC systems” in Sentence (1);

Replace Sentence (3) by the following:

“**3)** Dampers required in Article 5.2.4.1. are permitted to be located inboard of the *building envelope*, provided the thermal resistance of the duct insulation between the damper and the *building envelope* is that provided in Table 5.2.2.5. according to the applicable temperature difference, without being less than 0.74 m²·°C/W.”.

5.2.5. Replace “Heating, Ventilating and Air-conditioning Systems” in the heading by “HVAC Systems”.

5.2.5.1. Replace the Article by the following:

“**5.2.5.1. Design, Construction and Installation**

1) HVAC piping shall be designed, constructed and installed in accordance with the NBC.”.

5.2.5.3. Replace Sentence (1) by the following:

“**1)** Except as provided in Sentences (2) to (6), piping and accessories forming part of an *HVAC system* shall be thermally insulated in accordance with Table 5.2.5.3. (See Notes A-5.2.5.3.(1) and A-5.2.2.5.(2), 5.2.5.3.(8) and 6.2.3.1.(6).)”;

Replace Table 5.2.5.3. by the following:

“**Table 5.2.5.3.**
Minimum Thickness of Piping Insulation, in mm
Forming Part of Sentences 5.2.5.3.(1), (3) to (5), and (8)

Type of System	Design Operating Temperature Range, °C	Thermal Conductivity of Insulation		Nominal Pipe Diameter, mm (inches)		
		Conductivity Range, W/m·°C	Mean Rating Temperature,°C	≤ 25.4 (≤ 1)	> 25.4 and ≤ 51 (> 1 and ≤ 2)	> 51 (> 2)

				Minimum Thickness of Piping Insulation, mm		
Heating systems (steam, steam condensate and hot water)	> 177	0.046 – 0.049	121	114	127	127
	122 – 177	0.042 – 0.045	93	76.2	101.6	114
	94 – 121	0.039 – 0.043	65	63.5	63.5	76.2
	61 – 93	0.036 – 0.042	52	38.1	50.8	50.8
	41 – 60	0.035 – 0.040	38	25.4	38.1	38.1
Cooling systems (chilled water, brine and refrigerant)	4 – 16	0.030 – 0.039	24	25.4	25.4	25.4
	< 4	0.030 – 0.039	24	25.4	38.1	38.1

";

Replace Sentence (3) by the following:

"**3)** HVAC piping need not comply with Table 5.2.5.3. if it

a) is located within a *conditioned space* and conveys fluids with design operating temperatures greater than 16°C and less than 41°C,

b) is used only to reject heat and is located outside the *building envelope*, or

c) is used for the circulation of a fluid that is neither heated nor cooled by electricity or a fossil fuel. (See Note A-5.2.5.3.(3)c).)";

Strike out "(See Note A-5.2.2.5.(7) and 5.2.5.3.(7).)" in Sentence (7).

5.2.6.

Replace the heading by the following:

"**5.2.6. Pumping System Design**

(See Note A-5.2.3.1. and 5.2.6.)".

5.2.6.1.

Replace Sentences (1) and (2) by the following:

"**1)** This Subsection applies to pumping systems of *HVAC systems*

a) with a total of the pump system motor power ratings in Sentence (2) of at least 7.5 kW, and

b) including control valves designed to modulate or to open and close in steps as a function of thermal energy load.

2) For the purposes of this Subsection, the total of the pump motor power ratings of the *HVAC system* shall be the sum of the nameplate power ratings of each pump motor required to operate at design conditions to supply thermal energy to an *HVAC system* or *conditioned space*.".

5.2.6.2.

Replace the Article by the following:

"**5.2.6.2. Requirements for Pumping Systems of HVAC Systems**

1) Except as provided in Sentence (2), pumping systems that provide thermal energy to an *HVAC system* or a *conditioned space* shall be

a) designed for variable fluid flow, and

b) capable of reducing system flow to 50% or less of design flow.

(See Note A-5.2.6.2.(1).)

	2) Sentence (1) does not apply to pumping systems that provide thermal energy to an *HVAC system* or a *conditioned space* a) in which a minimum flow greater than 50% of the design flow is required for the proper operation of the *main system*, b) with a single control valve, or c) that include controls to reset the fluid supply temperature based on either outdoor temperature or *main system* loads.”.
5.2.6.3.	Strike out the Article.
5.2.7.1.	Replace “an unconditioned space” in Sentence (1) by “a space other than a *conditioned space*”.
5.2.8.1.	Replace Sentence (1) by the following: “**1)** Each *HVAC system* designed to heat or cool to provide comfort shall serve at least one *temperature-control zone*.”; Strike out Sentence (2).
5.2.8.2.	Replace Sentence (1) by the following: “**1)** Each *dwelling unit* shall be considered as at least one *temperature-control zone*.”; Strike out Sentence (2).
5.2.8.3.	Replace “a maximum *overall thermal transmittance* of 0.286 W/(m^2·K)” in Clause (1)(b) by “an *effective thermal resistance* of at least 3.60 (m^2·°C)/W”.
5.2.8.4.	Replace Sentence (1) by the following: “**1)** Heat pumps equipped with supplementary heat elements shall incorporate controls to prevent supplementary heat element operation when the heating load can be met only by the heat pump, except during defrost cycles.”.
5.2.8.5.	Replace “to a zone” in Sentence (1) by “to a *temperature-control zone*”; Strike out “(see Note A-5.2.8.5.(2)(a))” in Clause (2)(a); Replace “the zone(s) it serves” in Clause (2)(b) by “the *temperature-control zone(s)* it serves”; Add the following line at the end of Sentence (2): “(See Note A-5.2.8.5.(2).)”; Replace “a space” in Sentence (3) by “a *temperature-control zone*”;

	Replace Sentence (4) by the following: “**4)** Where heating and cooling to a *temperature-control zone* are controlled by the same thermostatic control, the difference between the heating cycle shutdown temperature and the cooling cycle startup temperature shall be at least 1.5°C and conversely.”.
5.2.8.6.	Replace the Article by the following: “**5.2.8.6. Ice- and Snow-Melting Heater Controls and Frost Protection Equipment** **1)** Ice- and snow-melting heating systems located outside the *building envelope* shall be provided with automatic controls that shut the systems down where a) the outdoor temperature is more than 4.4°C, or b) the temperature of the surface with a heating system is more than 10°C. **2)** Equipment for protecting piping located outside the *building envelope* against frost using a heating cable shall be equipped with automatic controls that shut down the equipment a) where the outdoor temperature is more than 4.4°C, or b) where there is no risk of frost for the fluid circulating in the protected piping.”.
5.2.8.7.	Replace Sentence (2) by the following: “**2)** Reheating supply air previously cooled to reach the required humidity level is permitted. (See Note A-5.2.8.7.(2).)”; Insert “(See Note A-5.2.8.7.(3).)” at the end of Sentence (3).
5.2.8.8.	Replace the term “Except as provided in Sentence (4)” wherever it appears in Sentences (1) to (3) by “Except as provided in Sentence (6)”; Italicize “HVAC systems” in Sentences (1) to (3); Replace Sentence (4) by the following: “**4)** Except as provided in Sentence (6), the airflow rate that is reheated, cooled or mixed in the *temperature-control zones* without a direct digital control system shall be less than the larger of the following flows: a) 30% of the maximum supply flow in the *temperature-control zone*, or b) the outdoor airflow rate required by the NBC to maintain acceptable indoor air quality. (See Note A-5.2.8.8.(4) and (5).) **5)** Except as provided in Sentence (6), *temperature-control zones* with a direct digital control system shall have a) a supply airflow rate less than the larger of the following flows, where the supply airflow rate of the *temperature-control zone* is neither heated nor cooled: i) 20% of the maximum supply flow of the *temperature-control zone*, or ii) the outdoor airflow rate required in the NBC to maintain acceptable indoor air quality, b) an airflow reheated, cooled or mixed less than 50% of the maximum supply flow of the *temperature-control zone*, and c) the following heating sequence:

	i) a first heating stage to modulate the zone temperature setpoint to the maximum supply temperature and to maintain an airflow rate equal to that established in Clause (5)(a), and ii) a second heating stage to maintain the zone temperature setpoint to its maximum value and to modulate the airflow rate to the airflow rate provided for in Clause (5)(b). (See Note A-5.2.8.8.(4) and (5).) **6)** Sentences (1) to (5) do not apply in *temperature-control zones* in which at least 75% of the energy necessary for heating shall be provided by a) the energy recovered at the site, or b) the solar energy produced at the site, except the energy due to passive heat gain created by fenestration. (See Note A-5.2.8.8.(6).)".
5.2.9.	Replace the heading of the Subsection by the following: "**5.2.9. Humidification and Dehumidification**".
5.2.9.1.	Italicize "HVAC system" in Sentence (1).
5.2.10.	Replace the heading of the Subsection by the following: "**5.2.10. Heat or Energy Recovery**".
5.2.10.1.	Replace the heading of the Article by the following: "**5.2.10.1. Heat or Energy Recovery**"; Replace Sentence (1) by the following: "**1)** Except as provided in Sentence (3) and Articles 5.2.10.2. and 5.2.10.4., when the quantity of sensible heat of each exhaust air equipment as calculated in accordance with Sentence (4) exceeds 50 kW, the *HVAC system* shall be equipped with heat- or energy-recovery equipment compliant with Sentence (5). (See Note A-5.2.10.1.(1).)"; Strike out "systèmes ou" in Sentence (2) of the French text; Replace Sentence (3) by the following: "**3)** The following equipment need not comply with Sentence (1): a) specialized exhaust equipment, such as those used to exhaust smoke, grease-laden vapours, or toxic, flammable, paint, or corrosive fumes or dust, b) exhaust equipment operated less than 20 h per week, and c) exhaust equipment serving *conditioned spaces* with a temperature maintained at less than 16°C."; Replace Sentence (5) by the following: **5)** Heat- or energy-recovery equipment shall have a) a net sensible efficiency of at least 60% where the efficiency is i) established at 100% of the heating test flow,

	ii) measured according to ANSI/AHRI 1061 (SI), “Performance Rating of Air-to-Air Exchangers for Energy Recovery Ventilation Equipment,” and iii) certified by AHRI, or b) a sensible heat recovery capacity of at least 55% where the recovery capacity is i) established at a flow of at least 22 L/s for a temperature at the supply air inlet of –25°C, ii) measured according to CAN/CSA-C439, “Standard Laboratory Methods of Test for Rating the Performance of Heat/Energy-Recovery Ventilators,” and iii) certified by HVI.”.
5.2.10.2.	Replace the Article by the following: “**5.2.10.2. Swimming Pools** **1)** *HVAC systems* for swimming pools with a surface area of at least 10 m² located within *conditioned spaces* shall comply with Sentences (2) and (3). **2)** Swimming pool exhaust air equipment referred to in Sentence (1) shall a) have an exhaust airflow limited to the outdoor air required by the NBC to maintain acceptable indoor air quality, and b) recover at least 60% of the sensible heat of the exhaust air at the design conditions in compliance with Sentence 5.2.10.1.(5). (See Note A-5.2.10.2.(2).) **3)** *HVAC systems* that serve a swimming pool referred to in Sentence (1) shall include mechanical dehumidification equipment that a) ensures untreated dehumidification by the exhaust air equipment described in Sentence (2), and b) rejects heat from dehumidification in *building* systems. (See Note A-5.2.10.2.(3)(b).)”.
5.2.10.3.	Replace the Article by the following: “**5.2.10.3. Refrigeration Systems** **1)** The following systems shall comply with Sentences (2) and (3): a) refrigeration systems for creating or maintaining an ice sheet in heated *buildings*, such as an ice arena or a curling rink, and b) refrigeration systems installed in heated *buildings* with a building area of more than 2500 m², for food conservation and connected to a centralized refrigeration system. (See Note A-5.2.10.3.(1)(b).) **2)** The refrigeration systems referred to in Sentence (1) shall include heat recovery equipment a) that recovers at least 25% of the heat before it is rejected to the condenser (see Note A-5.2.10.3.(2)(a)), or b) that meets at least 80% of the space heating or *service water* heating capacity. (See Note A-5.2.10.3.(2)(b).) **3)** The heat recovery equipment described in Sentence (2) shall not increase the refrigerant saturation temperature beyond the temperature established at design conditions. **4)** Auxiliary heating in a space heated by the heat recovery equipment described in Sentence (2) is not permitted to operate where the equipment may completely ensure the heating load of that space.”.

5.2.10.4.	Replace the Article by the following: "**5.2.10.4. Dwelling units** **1)** The main mechanical ventilation system of each *dwelling unit* shall be equipped with heat- or energy-recovery equipment. (See Note A-5.2.10.4.(1).) **2)** The heat- or energy-recovery equipment referred to in Sentence (1) shall have a) a net sensible efficiency of at least 60% in the case of a *building* located in a municipality whose number of degree-days under 18°C is less than 6000 and of at least 65% in the case of a *building* located in another municipality where the efficiency is i) established at 100% of the heating test flow, ii) measured according to ANSI/AHRI 1061 (SI), "Performance Rating of Air-to-Air Exchangers for Energy Recovery Ventilation Equipment," and iii) certified by AHRI, or b) a sensible heat recovery capacity of at least 55% in the case of a *building* located in a municipality whose number of degree-days under 18°C is less than 6000 and of at least 60% in the case of a *building* located in another municipality where the recoverey capacity is i) established at a flow of at least 22 L/s for a supply air inlet temperature of –25°C, ii) measured according to CAN/CSA-C439, "Standard Laboratory Methods of Test for Rating the Performance of Heat/Energy-Recovery Ventilators," and iii) certified by HVI. (See Note A-5.2.10.4.(2)(b).)".
5.2.11.1.	Replace Sentence (1) by the following: **1)** The following *HVAC systems* shall be equipped with automatic controls complying with Sentences (2) and (4): a) *HVAC systems* that are not intended to operate continuously, b) *HVAC systems* serving *dwelling units*, c) *HVAC systems* whose heating or cooling capacity is more than 5 kW, or d) *HVAC systems* i) whose heating or cooling capacity is 5 kW or less, and ii) serving *temperature-control zones* that are not equipped with readily accessible manual controls. (See Note A-5.2.11.1.(1).)"; Replace Clause (2)(a) by the following: "a) shutting down fan systems and/or heating and cooling equipment and auxiliaries, where appropriate, when heating, cooling or ventilation is not required by the *conditioned space* served,"; Replace "space" in Clause (2)(b) by "*conditioned space*"; Replace Clause (2)(c) by the following: "c) increasing the setpoint of cooling equipment if the equipment is required to operate during periods when the *conditioned space* served is not in use,"; Replace "space" in Clause (2)(b) by "*conditioned space*";

	Replace Clause (2)(e) by the following: “e) in the case of heat pumps, temporarily suppressing supplementary heating elements or anticipation of the reaching of the setpoint established during periods of occupancy. (See Notes A-5.2.11.1.(2)(e) and A-5.2.8.4.(1).)”; Strike out Sentence (3).
5.2.11.2.	Replace Sentences (1) to (3) by the following: “**1)** Except as provided in Sentences (7) and (8), each air distribution system serving multiple *temperature-control zones* shall be divided into *airflow control areas*. (See Note A-5.2.11.2.(1) and (2).) **2)** Each *airflow control area* required by Sentence (1) shall serve a *floor area* of not more than 2300 m². (See Note A-5.2.11.2.(1) and (2).) **3)** Each *airflow control area* required by Sentence (1) shall include only the *temperature-control zones* to be operated simultaneously.”; Replace “Sentences (1) and (2)” in Sentence (4) by “Sentence (1)”; Insert “(See Note A-5.2.11.2.(5).)” at the end of Sentence (5); Replace “Controls and devices such as direct digital control and variable-air-volume systems” in Sentence (7) by “Means”; Insert “(See Note A-5.2.11.2.(7).)” at the end of Sentence (7); Replace Sentence (8) by the following: “**8)** The following need not be incorporated into *airflow control areas*: a) *temperature-control zones* in which outdoor air and exhaust requirements prevent the reduction or stopping of the air supply, or b) *dwelling units*.”.
5.2.11.3.	Replace “HVAC pumping systems” in Sentence (1) by “*HVAC systems*”; Replace “shut down” in Clause (1)(b) by “stopped”.
5.2.11.4.	Replace the Article by the following: “**5.2.11.4. Boilers** **1)** *HVAC systems* with multiple *boilers* shall incorporate a means for preventing heat loss through a *boiler* when it is not operating. (See Note A-5.2.11.4.(1).) **2)** Except as provided in Sentence (3), where the heating load of *boilers* of an *HVAC system* exceeds 176 kW, the *HVAC system* shall consist of a) more than one *boiler*, b) a multi-stage *boiler*, or c) a fully modulating *boiler*. **3)** Where the heating load of the *boilers* of an *HVAC system* exceeds 352 kW, those *boilers* shall be fully modulating.”.

5.2.11.5.	Replace Sentence (1) by the following: "**1)** Except as provided in Sentences (2) and (3), a system with a design capacity of more than 88 kW that provides chilled or hot water to an *HVAC system* used for comfort purposes shall be equipped with automatic controls that reset the temperature of each supply water loop a) in relation to outdoor temperature, or b) in relation to the *building* heating and cooling loads. (See Note A-5.2.11.5.(1).)"; --- Insert "(See Note A-5.2.11.5."2).)" at the end of Sentence (2).
5.2.12.1.	Replace the Article by the following: "**5.2.12.1. Unitary and Packaged HVAC Equipment** **1)** Unitary and packaged equipment and components that are part of a *building HVAC system* shall comply with the efficiency requirements provided for in the Act respecting energy efficiency and energy conservation standards for certain electrical or hydrocarbon-fuelled appliances (chapter N-1.01) and its regulations. (See Notes A-5.2.12.1.(1), 6.2.2.1.(1), 7.2.3.1.(1) and 7.2.4.1.(1).)".
5.2.12.2.	Strike out the Article.
5.2.12.3.	Strike out the Article.
5.2.12.4.	Strike out the Article.
	Add the following Subsection: "**5.2.13. Commercial Cooking Ventilating System**"
	Add the following Article: "**5.2.13.1. Commercial Cooking Ventilating System** **1)** The make-up airflow introduced directly in the commercial cooking air exhaust system shall be less than 10% of the exhaust airflow. (See Note A-5.2.13.1.(1).) **2)** Commercial cooking exhaust air systems with a cumulative flow of more than 2360 L/s shall comply with one of the following requirements: a) at least 50% of the airflow rate necessary to offset the cooking exhaust rate shall come from available transfer air, in L/s, established using the following equation: $$\text{Available transfer air} = D_a - D_w - D_e$$ where D_a = outdoor airflow entering the *building*, excluding the make-up outdoor airflow directly serving the kitchen, in L/s, D_w = airflow extracted from washrooms, in L/s, and D_e = outdoor airflow to offset other exhaust equipment, in L/s.

	(See Note A-5.2.13.1.(2)(a).); b) at least 75% of the cooking exhaust rate shall come from an exhaust demand air system that shall i) detect cooking emissions (see Note A-5.2.13.1.(2)(b)(i)), and ii) reduce to at least 50% exhaust and make-up flows in the absence of cooking emission, or c) at least 40% of the sensible heat shall be recovered over at least 50% of the cooking exhaust rate by a heat recovery unit designed for that purpose.”.
5.3.	Replace the heading of the Section by the following: “**Section 5.3. Reserved**”.
5.4.1.1.	Replace “heating, ventilating and air-conditioning system” in Sentence (1), by “*HVAC system*”; --- Strike out “or 5.3” in Sentence (1).
5.4.1.2.	Replace the Article by the following: “**5.4.1.2. Limitations** **1)** The performance path shall not take into consideration the energy performance a) of back-up *HVAC systems*, b) air distribution systems, c) air intake and outlet dampers, d) HVAC piping, e) space temperature control, and f) *airflow control areas*. (See Note A-5.4.1.2.(1) and 2).) **2)** The elements in Sentence (1) shall comply with Section 5.2. (See Note A-5.4.1.2.(1) and (2).)”.
5.5.1.1.	Replace the headings of Articles in Table 5.5.1.1. by the following: “**5.2.2.9. Cooling by Indirect Use of Outdoor Air**”; “**5.2.6.2. Requirements for Pumping Systems of HVAC Systems**”; “**5.2.8.6. Ice- and Snow-Melting Heater Controls and Frost Protection Equipment**”; “**5.2.10.1. Heat or Energy Recovery**”; “**5.2.10.3. Refrigeration Systems**”; “**5.2.11.4. Boilers**”; “**5.2.12.1. Unitary and Packaged HVAC Equipment**”; --- Insert respectively, in numerical order, the following objectives and functional statements in Table 5.5.1.1.: “**5.2.2.3. Duct Sealing** (3) [F91,F99-OE1.1] (4) [F91,F99-OE1.1]”;

	"**5.2.2.4. Leakage Testing of Ducts** (3) [F91,F99-OE1.1]"; "**5.2.3.1. Application** (4) [F95,F97-OE1.1] (5) [F95,F97-OE1.1] (6) [F95,F97-OE1.1]"; "**5.2.8.6. Ice- and Snow-Melting Heater Controls and Frost Protection Equipment** (2) [F95-OE1.1]"; "**5.2.8.8. Control of Space Temperature by Reheating or Recooling** (4) [F95-OE1.1] (5) [F95-OE1.1]"; "**5.2.10.2. Swimming Pools** (2) [F95,F100-OE1.1] (3) [F95,F100-OE1.1]"; "**5.2.10.3. Refrigeration Systems** (2) [F95,F96,F100-OE1.1] (3) [F95,F96,F100-OE1.1]"; "**5.4.1.2. Limitations** (2) [F98,F99-OE1.1]"; --- Insert respectively, in numerical order, the following Articles, objectives and functional statements in Table 5.5.1.1.: "**5.2.2.7. Outdoor Air Cooling** (1) [F95-OE1.1] (3) [F95-OE1.1] (4) [F95-OE1.1]"; "**5.2.13.1. Commercial Cooking Ventilating System** (1) [F97-OE1.1] (2) [F95,F100-OE1.1]"; --- Strike out respectively the following objectives and functional statements in Table 5.5.1.1: "**5.2.2.5. Duct and Plenum Insulation** (5) [F93,F95-OE1.1] (7) [F92,F93,F95-OE1.1] (8) [F93,F95,F99-OE1.1]"; "**5.2.2.8. Cooling by Direct Use of Outdoor Air (Air Economizer System)** (5) [F95-OE1.1]"; "**5.2.8.1. Temperature Controls** (2) [F95-OE1.1]"; "**5.2.8.2. Temperature Control within Dwelling Units** (2) [F95-OE1.1]"; "**5.2.10.4. Heat Recovery in Dwelling Units**

	(3) [F95,F100-OE1.1] (4) [F95,F100-OE1.1] (5) [F95,F100-OE1.1]"; --- Strike out the following Articles, objectives and functional statements in Table 5.5.1.1.: "**5.2.3.4. Demand Control Ventilation Systems** (1) [F95,F97-OE1.1]"; "**5.2.6.3. Pumping Power Demand** (1) [F95,F97,F98,F99-OE1.1]"; "**5.2.12.2. Heat Rejection Equipment** (2) [F95,F97,F98,F99-OE1.1] (3) [F95,F97-OE1.1]"; "**5.2.12.3. Field-Assembled Equipment and Components** (1) [F99-OE1.1]"; "**5.2.12.4. Service Water Heating Equipment Used for Space Heating** (1) [F98-OE1.1]"; "**5.3.1.1. Application** (1) [F95,F99-OE1.1] "6.3.1.1."; "**5.3.1.3. Compliance** (1) [F95,F99-OE1.1]"; "**5.3.2.1. HVAC Trade-off Index** (1) [F95,F99-OE1.1]"; "**5.3.2.2. Determination of Components to Be Included, y_i** (1) [F95,F99-OE1.1]"; "**5.3.2.3. Determination of Trade-off Value of Components, ToV_i** (1) [F95,F99-OE1.1]"; "**5.3.2.4. Determination of Base Value of Components, BaV_i** (1) [F95,F99-OE1.1]"; "**5.3.2.5. Determination of Weighting Factor Linking the Component Efficiency Variation to the System Efficiency Variation, α_i and β_i** (1) [F95,F99-OE1.1] (2) [F95,F99-OE1.1]"; "**5.3.2.6. Determination of Climatic Parameter Relevant to the Component, XDD_i** (1) [F95,F99-OE1.1]"; "**5.3.2.7. Determination of Trade-off Value of Component, ToV_i** (1) [F95,F99-OE1.1]"; "**5.3.2.8. Coefficient Values: α_{1i}, α_{2i}, α_{3i}, β_{1i}, β_{2i} and β_{3i}** (1) [F95,F99-OE1.1]".
Division B Part 5 Schedule A	

A-5.1.1.2.(2)	Strike out the Note.
	Add the following Note: "**A-5.1.1.2.(2) and (4) HVAC system and process or activities.** An HVAC system fully dedicated to a process or an activity described in Sentence 5.1.1.2.(2) is exempted from complying with Part 5. The Code provides provisions to the contrary, in particular for HVAC systems serving the following rooms, processes and activities that are not *exempted* from Part 5 requirements: • server rooms (Article 5.2.2.7.), • laboratories and vivariums (Subsection 5.2.3.), • hospitals (Article 5.2.2.7. and Subsection 5.2.3.), • swimming pools (Article 5.2.10.2.), • ice-making machines and food refrigeration equipment (Article 5.2.10.3.), and • commercial cooking exhaust equipment (Subsection 5.2.13.). In addition, Sentence 5.1.1.2.(4) provides that an HVAC system serving both a room that requires usual comfort conditions and a room in which a process calls for temperatures, airflows or humidity rates outside the normal range required cannot benefit from the exemption permitted in Sentence 5.1.1.2.(2). In compliance with the performance path, process and activity HVAC systems must be modeled since they have an impact on the heating, cooling and/or humidification load of rooms adjacent to the process or activity.".
A-5.1.1.3.(1)	Replace "three paths" in the Note by "two paths"; Replace Figure A-5.1.1.3.(1) by the following: " 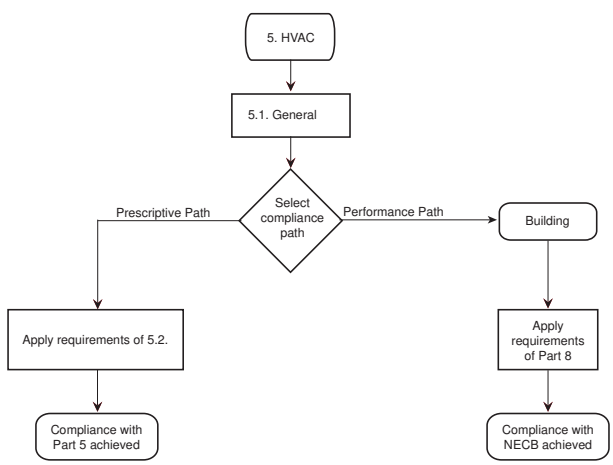 **Figure A-5.1.1.3.(1)** **Code compliance paths for HVAC**".

A-5.2.2.2.(1)	Strike out “, such as variable air-volume systems,” and “such as main, sub-main or branch ducts intended to carry conditioned air”.
A-5.2.2.3.(1)	Replace the Note by the following: “**A-5.2.2.3.(1) Duct Sealing.** Even if ANSI/SMACNA 006, “HVAC Duct Construction Standards – Metal and Flexible” is less restrictive for certain sealing classes, all air ducts and plenums must be sealed as a class A duct, i.e. at every transversal joints, along all the longitudinal assembly lines and where the ducts penetrate walls, as required by Sentence 5.2.2.3.(1). Sealing applies both to positive pressure ducts and negative pressure ducts.”.
A-5.2.2.3.(4)	Strike out the Note.
A-5.2.2.4.(1)	Strike out the Note.
A-5.2.2.5.(2), 5.2.5.3.(8) and 6.2.3.1.(6)	Add the following at the end of the Note: “The minimum insulation thicknesses required may have to be increased to eliminate condensation on ducts or to protect against burns.”.
A-5.2.2.5.(7) and 5.2.5.3.(7)	Strike out the Note.
	Add the following Notes: **A-5.2.2.7.(2)(d) Non-particle Filtration.** Contrary to particle filtration, non-particle filtration is generally used where the outdoor air is polluted or where the indoor air quality must be controlled, such as a medical environment where a molecular filter is used to remove ozone and nitrogen oxides. That type of air handler uses energy and the addition of an economizer system requires to design the air handler not for the minimum new air but for 100% of the supply flow. In that case, the energy gain obtained by not operating the mechanical cooling may cancel itself or even transform itself into greater energy consumption. **A-5.2.2.7.(2)(f) Heat Recovery Unit in Coolers.** Where the cooler has a heat recovery unit on its condenser, shutting down of the cooler for using the economizer system would cancel the heating savings due to recovery. **A-5.2.2.7.(2)(g) Semi-conditioned Spaces During Operating Hours.** Energy savings related to an economizer system depend mostly on the cooling needs of the spaces during heating. In most cases, a cooling setpoint of at least 26°C does not generate sufficient cooling needs to justify the cost for the installation of an economizer system. **A-5.2.2.7.(3) Cooling by the Use of Outdoor Air Integrated to the Mechanical Cooling.** Based on the outdoor air temperature and the cooling demand, the cooling load will be ensured only by the economizer system, by a combination of the economizer system and mechanical cooling or only by mechanical cooling.

	A-5.2.2.7.(4) Water Economizer System where the HVAC System Includes Hydronic Loop Cooling and a Humidification System. The humidification systems used simultaneously with an air economizer system may consume a lot of energy because the introduction of dry air in winter adds a significant humidification load. To prevent excessive energy consumption, the economizer system, where required, must be on the water system and not on the air system. That requirement is limited to hydronic loop mechanical cooling and not to direct expansion cooling.”.
A-5.2.2.8.(2)	Replace the Note by the following: “**A-5.2.2.8.(2) Outdoor Airflow for Indoor Air Quality.** Outdoor air requirements for acceptable indoor air quality are covered in Part 6 of Division B of the NBC. **Types of Shut-off Settings.** As mentioned in Clause 5.2.2.8.(2)(b), only the shut-off settings in Table 5.2.2.8.-A are permitted. Combining two types of settings or dividing one type of setting is not permitted.”.
	Add the following Notes: “**A-5.2.2.8.(3) Minimum Mechanical Cooling Stage Controlled Directly from Room Temperature.** When the direct expansion mechanical cooling activates in addition to the outdoor air cooling, the objective is not to reduce the supply temperature so as to create discomfort in the conditioned zone. That means that the mechanical cooling operates at a minimum of two stages, by the use of multiple compressors, by the use of only one two-stage compressor or by the use of a variable-speed compressor. Sentence 5.2.2.8.(3) applies to mechanical cooling directly controlled from room temperature rather than the supply temperature of the air handler. In the latter case, the requirements of Sentence 5.2.2.8.(4) apply. **A-5.2.2.8.(4) Minimum Mechanical Cooling Stage.** Sentence 5.2.2.8.(4) applies in particular to variable-air-volume HVAC systems controlled from the air handler supply air temperature. For example, where three mechanical cooling stages are required, the requirement may be complied with using a variable-speed compressor. In that case, the minimum displacement of the compressor must be less than or equal to 33% of the total cooling capacity. Another possibility is to use two compressors, the first stage uses a compressor with a 33% total cooling capacity, the second stage uses a compressor with 66% displacement and the third stage uses the combination of two compressors to reach 100% of the total cooling capacity. In that case, the cooling capacity provided by the first stage is equivalent to the minimum displacement of 33% of a variable-speed compressor.”.
A-5.2.2.8.(6)	Strike out the Note.
	Add the following Note: “**A-5.2.2.9. Water Economizer System.** The water economizer system reduces the mechanical cooling load by cooling the heat transfer fluid of the cooling system with outdoor air. The energy savings are made by reducing the compressor use time. There are two typical compliant configurations for the water economizer system, • evaporation cooling, also called “water precooling,” such as that shown in Figure A-5.2.2.9.-A, and • sensible heat transfer cooling, also called “air precooling,” such as that shown in Figure A-5.2.2.9.-B. The dotted lines represent the portion of the economizer system.

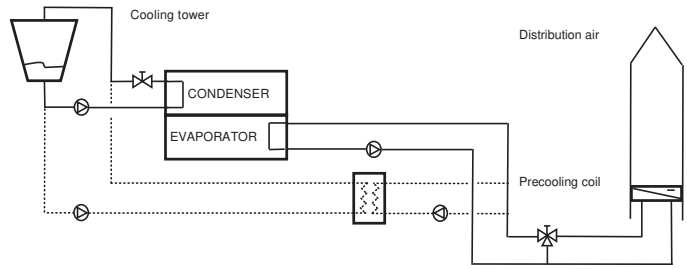

Figure A-5.2.2.9.-A

Evaporation cooling economizer system – water precooling by a water economizer system

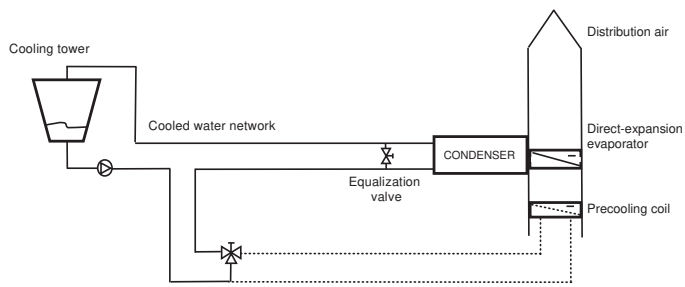

Figure A-5.2.2.9.-B

Sensible heat transfer cooling economizer system – air precooling by a water economizer system".

Add the following Notes:

"**A-5.2.3.1. and 5.2.6. Brake Horsepower, Rated Capacity and Power Demand.** The capacity of a fan varies depending on the location where it is measured on a "fan, motor, variable-speed drive" set.

The brake horsepower is measured directly on the fan, on its drive shaft. It is sometimes expressed by the fan manufacturer in bhp. The brake horsepower is the power necessary to drive the fan blades.

The rated capacity is measured on the fan motor and is indicated on its nameplate. The rated capacity is the brake horsepower to which the power necessary to offset losses due to the strap and the internal losses of the electric motor is added.

The power demand is measured at the circuit breaker of the electrical panel. It is the electric power necessary to supply the "fan, motor, variable-speed drive" set. The power demand is the rated capacity to which the power necessary to offset the losses due to the variable-speed drive is added, where applicable.

For a "fan, motor, variable-speed drive" set, the brake horsepower is always less than the rated capacity, that is itself always less than the power demand.

Figure A-5.2.3.1. shows the various locations where the capacity of a fan can be measured.

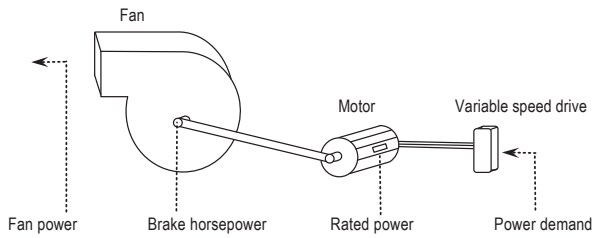

Figure A-5.2.3.1.

Power that may be measured on the "fan, motor, variable-speed drive" set. The pump capacities follow the same principles as those described above for fans, with the necessary modifications. For example, the power demand of a pump is also measured at the circuit breaker of an electrical panel. It is the electrical power necessary to supply the "turbine, motor, variable-speed drive" set.

A-5.2.3.1.(1), (2) and (3) Application. Fans to take into consideration in the calculation of the total of the powers are those that

- belong to the same HVAC system. Figure A-5.2.3.1.(1), (2) and (3) shows an example of an HVAC system with multiple fans. For example, if two HVAC systems have their own supply fans, their own heating and cooling coils and serve the same zone, they are considered to be two separate HVAC systems even if they serve the same zone. Two separate calculations must then be made to establish the total of the powers,
- operate when the two design conditions, heating and cooling, are met. The power limit of 4 kW applies to fans whose total rated capacity is the highest between the heating conditions and the cooling conditions, and
- carry heated or cooled air. The calculation must take into account all the supply fans, return fans, relief fans, and fans for series fan-powered boxes.

Some fans may not be included in the calculation of the total of the power, such as the following:

- as mentioned in Clause 5.2.3.1.(3)(b), garage exhaust fans or server room transfer fans, where the spaces are not heated or cooled, and
- as mentioned in Sentence 5.2.3.1.(2), fans in parallel fan-powered boxes where they do not operate at the cooling design conditions and the conditions are higher than the heating design conditions.

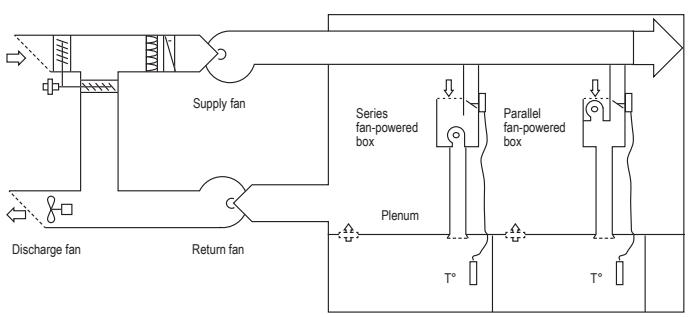

Figure A-5.2.3.1.(1), (2) and (3)

Example of an HVAC system with multiple fans".

A-5.2.3.1.(2)	Strike out the Note.
	Add the following Note: "**A-Table 5.2.3.1. Static Pressure Adjustments.** Multiple units and accessories in the ventilation system create a significant pressure loss and therefore require that the fan have a greater power to provide the flow required by the design conditions. The list of static pressure positive adjustments makes it possible to increase the limit of the allowed brake horsepower based on the accessories installed on the ventilation system. Certain adjustments are however negative and lower the power limit permitted.".
A-5.2.3.2.(1)	Replace the Note by the following: "**A-5.2.3.2.(1) Constant-Volume Fan Systems.** This type of system is found in particular in bypass variable-air-volume systems in which the airflow through the fan is not varied.".
	Add the following Note: "**A-5.2.3.2.(2) Maintenance of Pressure for Health or Safety Purposes.** Constant-volume systems are common in hospitals, vivariums and laboratories. If a room needs to be kept under negative pressure so as not to contaminate the other rooms, a control will open the exhaust or return duct damper of the said room and will close the damper of the other rooms. The fans of such a system may use the power limits of variable-air-volume fan systems.".
A-5.2.3.3.(1)	Strike out the Note.
	Add the following Notes: "**A-5.2.3.3. Variable-Air-Volume Fan Systems.** A fan that automatically varies the airflow based on static pressure is controlled from the sensors in each powered box. Consequently, the following systems cannot be considered variable-air-volume fans and must use the limit of the constant-volume fan established in Article 5.2.3.2: • a constant-volume fan serving multiple zones and equipped with a bypass duct between its inlet and outlet (called "changeover bypass"), • a constant-volume fan serving multiple zones and equipped with powered boxes bypassing supply air in the return plenum (called "bypass terminal unit"), and • a constant-volume fan for which a variable-speed drive is used only at airflow balancing. **A-5.2.3.3.(2) Part-load Maximum Power.** Generally, a forward curved fan with inlet vanes or a variable-speed motor fan meets the requirement. **A-5.2.3.3.(3) Location of Static Pressure Sensors.** In a variable-volume system, the location of a static pressure sensor is critical for the good operation of powered boxes. The pressure upstream from the powered box must be greater than the pressure loss caused by that same box; otherwise, the airflow at the outlet of the powered box will be less than the specified airflow. A pressure too high upstream of the powered box will generate noise and a higher energy use at the location of the fan. The location of a static pressure sensor is therefore a compromise between control and energy saving. To guarantee savings with respect to a variable-volume

	system, the Code requires that the sensor be located so that the static pressure setpoint be at a maximum of 300 Pa. That pressure is sufficient to carry sensor air to conditioned zones. Where the system includes multiple main branches and it is impossible to comply with the requirement in Subclause 5.2.3.3.(3)(b)(i), the use of a static pressure sensor will be necessary at each branch of the main duct. **A-5.2.3.3.(4) Automatic Reset of Static Pressure Setpoint.** Where the powered boxes are equipped with direct digital controls centralized at the main control panel of the supply fan, the highest pressure among all the conditioned spaces of the system is the ideal pressure to be developed by the fan. The conditioned space with the highest pressure generally corresponds to the space where the powered box damper is the most open. That pressure is ideal because it allows all the powered boxes to have an inlet pressure sufficient to operate correctly and it allows the supply fan to develop the weakest pressure possible to minimize energy consumption. In that context, the static pressure setpoint must be constantly adjusted to follow the ideal pressure under the requirements of Sentence 5.2.3.3.(4).”.
A-5.2.3.4.(1)	Strike out the Note.
A-5.2.5.2.(1)	Strike out the first sentence of the Note.
A-5.2.5.3.(1)	Add the following at the end of the Note: “**Piping** The accessories connected to pipes include in particular strainers and valves.”.
	Add the following Note: “**A-5.2.5.3.(3)(c) Piping in which the Fluid Conveyed is not Heated or Cooled by Electricity or Fossil Fuel.** Natural gas or condensate pipes are examples of piping in which the fluid conveyed is not heated or cooled by electricity or fossil fuel.”.
A-5.2.6.2.(1)	Replace the Note by the following: “**A-5.2.6.2.(1) Requirements for HVAC Pumping Systems.** During part-load operation, a constant-flow pumping system is more energy consuming because it uses three-way valves to divert the fluid from coils, thermal beams or any other type of appliance. Flow may be varied by one of several methods such as variable-speed-driven pumps, staged multiple pumps or pumps riding their performance curves, (i.e. uncontrolled pumps).”.
A-5.2.8.3.(1)	Replace “Article 3.8.3.8.” by “Article 3.8.1.5.”.
A-5.2.8.4.(1)	Replace the Note by the following: “**A-5.2.8.4.(1) Supplementary Heating Elements.** For the purposes of Sentence 5.2.8.4.(1) and Clause 5.2.11.1.(2)(e), “supplementary” heat or heater refers to the provision of heat over and above the capacity of the heat pump in order to meet peak heating load demand.”.

	Add the following Note: "**A-5.2.8.5.(2) Thermostatic Controls for Perimeter Systems.** Sentence 5.2.8.5.(2) is intended to prohibit the use of an outdoor sensor as the sole control that determines the heat supplied to a space. However, a single-zone thermostat is permitted to be used for each building exposure as input to control the heat supplied to the perimeter system.".
A-5.2.8.5.(2)(a)	Strike out the Note.
A-5.2.8.7.(2)	Replace the Note by the following: "**A-5.2.8.7.(2) Reheating Supply Air for Humidity Control.** Sentence 5.2.8.7.(2) could apply to server rooms, operating rooms in health care institutions and museums. For those buildings, dehumidification is usually carried out by cooling mixture air under the dew point required to maintain humidity at the specified rate. However, that temperature may be too low in relation to the setpoint temperature in the space, so that reheating would be required at the cooling coil outlet to do so.".
	Add the following Notes: "**A-5.2.8.7.(3) Reheating Supply Air by Recovered Energy.** The energy rejected by the mechanical cooling system may be used to heat supply air without increasing the energy consumption of the building. **A-5.2.8.8.(4) and (5) Zones with Limited Flow of Reheated, Cooled or Mixed Air.** Simultaneous heating and cooling are permitted by Sentences 5.2.8.8.(4) and 5.2.8.8.(5) where the flow, during heating, cooling or mixture, is limited. The maximum limit has been established by the minimum opening of powered boxes of variable-volume built-up systems. That minimum opening is necessary to ensure a differential pressure adequate for the control of the powered box. The limits have been established at 20% for digital control systems and at 30% for other control systems (such as pneumatic control systems). **A-5.2.8.8.(6) Heat Recovery and Solar Energy.** The energy recovered at the site designates the heat recovered in the building to prevent energy consumption purchased from an energy supplier. Solar energy represents the thermal, chemical or electrical energy derived from the conversion of solar radiation. The conversion must be carried out on the site to prevent energy consumption purchased from an energy supplier.".
A-5.2.10.1.(1)	Replace the Note by the following: "**A-5.2.10.1.(1) Heat Recovery.** Building exhaust air is an important source of recoverable heat. However, heat recovery on small amounts of airflow is not always economical due to the costs involved in installing a heat-recovery apparatus, which will vary by project as will the actual savings realized for each project. To take that reality into account, the limit forcing heat recovery has been set at 50 kW of sensible heat in exhaust air extracted by exhaust air equipment considered individually. Sentence 5.2.10.1(1) allows the HVAC system to be equipped with only one heat recovery equipment for a number of exhaust equipment of a same system.".
A-5.2.10.2.(1)	Strike out the Note.

	Add the following Notes: "**A-5.2.10.2.(2) Heat Recovery from Exhaust Air from Swimming Pools.** Controlling humidity levels of the swimming pool with outdoor air is an energy consuming process and difficult to control in Québec's climate. The purpose of Clause 5.2.10.2.(2)(a) is to limit to a minimum air renewal of the swimming pool. The heat recovery requirement in Clause 5.2.10.2.(2)(b) applies to a swimming pool even if the quantity of sensible heat recovered is less than the 50 kW limit in Sentence 5.2.10.1.(1). **A-5.2.10.2.(3)(b) Heat Rejection from the Mechanical Dehumidification Equipment.** Heat rejection from the mechanical dehumidification equipment may be reused for heating swimming pool or shower water.".
A-5.2.10.3.(1)	Strike out the Note.
	Add the following Notes: "**A-5.2.10.3.(1)(b) Heat Recovery from Grocery Store Refrigeration Systems.** The requirement covers in particular large surface grocery stores that often have a large number of food counters connected to a refrigeration system. **A-5.2.10.3.(2)(a) Heat Recovery from Refrigeration Systems.** The heat at the condenser may usually be calculated by multiplying the cooler refrigeration capacity by its heat rejection factor. **A-5.2.10.3.(2)(b) Heat Recovery from Refrigeration Systems in Ice Arenas and Curling Rinks.** Heat recovered from refrigeration equipment can also be used for ice resurfacing or heating the soil beneath the ice's surface to prevent frost heave.".
A-5.2.10.4.(1)	Replace the Note by the following: "**A-5.2.10.4.(1) Heat Recovery in Dwelling Units.** Supplementary exhaust fans such as kitchen hoods or bathroom fans need not comply with the heat or energy recovery requirements.".
A-5.2.10.4.(2)	Strike out the Note.
	Add the following Note: "**A-5.2.10.4.(2)(b) Heat- or Energy-Recovery Ventilators.** CAN/CSA-C439, "Rating the Performance of Heat/Energy-Recovery Ventilators," describes a laboratory test that determines the energy performance of a heat- or energy-recovery ventilator. Test results for many models are listed in HVI's "Certified Home Ventilating Products Directory." The results also usually appear on a label on the equipment itself or in the manufacturer's published literature.".
A-5.2.10.4.(5)	Strike out the Note.

A-5.2.11.1.(2)(d)	Replace “Setback” by “Off-hour”.
A-5.2.11.1.(2)(e)	Replace the Note by the following: “**A-5.2.11.1.(2)(e) Heat Pump Controls for Recovery from Off-hours.** The requirements of Clause 5.2.11.1.(2)(e) can be achieved through several methods: • installation of a separate exterior temperature sensor limiting or stopping the operation of the supplementary heating element where the heat pump capacity is sufficient to ensure heating load, • setting a gradual rise of the temperature setpoint so that, at the end of the off-hours, the heat pump limits or stops the use of electrical backup, and • installation of controls that “learn” when to start recovery based on stored data, such as a start-stop optimization controller equipped with a self-learning function.”.
	Add the following Note: “**A-5.2.11.2.(1) and (2) Airflow Control Area.** Large central HVAC systems often serve temperature-control zones occupied by different commercial tenants according to different schedules. Where one central system is present and only part of the zones is occupied, energy for conditioning the unoccupied zones is wasted. The purpose of Sentence 5.2.11.2.(1) is to force the designer to separate from other zones those that are not operated simultaneously. Zones thus grouped form an airflow control area that, according to Sentences 5.2.11.2.(2) to 5.2.11.2.(4), may not exceed 2300 m² and may not span more than one storey. Where the designer does not know the occupation schedule at the time of designing, an airflow control area for each commercial rental space is suggested.
A-5.2.11.2.(3)	Strike out the Note.
	Add the following Notes: “**A-5.2.11.2.(5) Control for Airflow Control Areas.** Each airflow control area must include controls that allow to consider the area as having a separate HVAC system. Each airflow control area can operate according to occupation schedules different from other areas. Control of each area may be carried out by • direct digital control systems installed on the powered boxes, • powered boxes “normally closed,” including a spring that closes the air supply damper where the powered box actuator is no longer supplied with electricity, or • a motorized damper in the supply duct. **A-5.2.11.2.(7) Stable Operation of Fans and Associated Primary Systems.** Dividing a central HVAC system into several airflow control areas requires that the designer design the system so that it operates adequately at part-load, e.g. for the whole time the smallest temperature-control zone is the only one occupied. During different zone occupation periods, the operation of the principal fan and the HVAC heating and cooling equipment must be stable, adapted to the different part-loads and designed to frequently cycle between stop and start. Direct digital controls and variable-air-volume systems are means to comply with Sentence 5.2.11.2.(7).

	A-5.2.11.4.(1) Prevention of Heat Loss Between Boilers. Devices that prevent the flow of heat-carrying fluids through the boilers and dampers installed in the flues are examples of devices for preventing heat loss between boilers. Some boilers have a bypass. Because those boilers are in operation, they need not comply with Sentence 5.2.11.4.(1). **A-5.2.11.5.(1) Temperature Reset Methods.** The 88-kW design capacity in Sentence 5.2.11.5.(1) applies to a system with a chilled water loop, a hot water loop or both. Different methods allow the reset of the supply hot water loop temperature. For example, since the heating load of a building varies depending on outdoor temperature, an acceptable method could be the installation of a device that reduces the heating loop temperature where the outdoor temperature increases. However, that method on its own is not reliable for resetting the cooling loop temperature because most cooling loads do not vary on the basis of outdoor temperature. Another method consists in taking into account the actual heating or cooling load by resetting the heating or cooling loop temperature so that the coil valve that has the higher demand is maintained at its maximum opening. A variant of that method consists in estimating the average load of the loop using the return temperature. **A-5.2.11.5.(2) Exemptions of HVAC Equipment and Systems.** Dehumidification systems that must operate continuously all year for health reasons, such as in a hospital, or for protecting art work, such as in a museum, are examples of systems that may use the exemption in Sentence 5.2.11.5.(2). However, a coil temperature ill-adapted to the loop reset may not be considered as an acceptable exemption. The designer must ensure that all equipment will operate once the loop temperature is reset. More specifically, equipment must be designed to operate correctly at the hottest temperature of a chilled water system and at the coldest temperature of the hot water system.”.
A-5.2.12.1.(1)	Strike out the Note.
A-5.2.12.1.(1) and 6.2.2.1.(1)	Strike out the Note.
	Add the following Note: “**A-5.2.12.1.(1), 6.2.2.1.(1), 7.2.3.1.(1) and 7.2.4.1.(1) Performance Requirements and Levels.** In addition to various regulations concerning the building industry, there are regulations concerning the energy performance of devices and equipment. In Canada, the Energy Efficiency Act (S.C. 1992, c. 36) and its regulations, the Energy Efficiency Regulations, 2016 (SOR/2016-311) concern energy-using equipment. The Act and the regulations prohibit dealers, for the purposes of sale or lease, from shipping an energy-using product from one province to another, or importing an energy-using product into Canada that does not comply with the applicable energy efficiency standard or that is not labelled in accordance with the regulations. In Québec, the Act respecting energy efficiency and energy conservation standards for certain electrical or hydrocarbon-fuelled appliances (chapter N-1.01) and its regulation, the Regulation respecting the energy efficiency of electrical or

	hydrocarbon-fuelled appliances (chapter N-1.01, r. 1), prohibits the manufacturing, offering, selling or leasing of an appliance or otherwise disposing of it by gratuitous or onerous title by way of a commercial transaction if the appliance does not conform to the applicable energy efficiency and energy conservation standards. The publication of revision to those documents does not coincide with the publication of a new edition of the Code. That is why the Code does not specify the minimum performance of equipment or components. The information is provided for in the provincial Act and regulations.”.
	Add the following Notes: “**A-5.2.13.1.(1) Make-up Air for Exhaust of Air by Hood.** It is possible to offset with outdoor air directly in the hood. However, several studies have shown that, where the percentage of outdoor air exceeds 10%, hood air exhaust significantly reduces contaminant capture which forces users to increase hood flow. That increase results in a higher consumption to ensure exhaust of air and offset with outdoor air. **A-5.2.13.1.(2)(a) Transfer air.** Available transfer air is air that would have been discharged otherwise or that has first circulated in a space other than the kitchen. **A-5.2.13.1.(2)(b)(i) On Demand Exhaust.** Cooking fumes may in particular be detected by smoke detectors, temperature detectors under the hood, cooktop temperature detectors or a combination of those detectors. **A-5.4.1.2.(1) and (2) Limitations.** The HVAC systems and equipment listed in Sentence 5.4.1.2.(1) are covered by the prescriptive requirements in • Sentence 5.1.1.3.(2) for back-up HVAC systems, • Articles 5.2.2.1. to 5.2.2.6. for air duct systems, • Subsection 5.2.4. for air intake and outlet dampers, • Subsection 5.2.5. for HVAC piping, • Article 5.2.8.5. for space temperature control, and • Article 5.2.11.2. for airflow control areas.”.
Division B Part 6	Replace the heading of the Part by the following: “**Part 6** **SERVICE WATER SYSTEMS AND SWIMMING POOLS**”.
6.1.1.2.	Insert “and except as provided in Sentence (2)” after “firegfighting services” in Sentence (1); Add the following Sentence: “**2)** This Part does not apply to existing parts of *service water* heating systems that are extended to serve *additions*.”.
6.1.1.3.	Replace Sentence (1) by the following: “**1)** Except as provided in Sentence (2), compliance with this Part shall be achieved by following a) the prescriptive path described in Section 6.2., or b) the performance path described in Section 6.4. (see Note A-3.1.1.3.(1)(c)).

	(See Note A-6.1.1.3.(1).)”.
6.2.1.	Replace the Subsection by the following: “**6.2.1. Reserved**”.
6.2.2.1.	Replace Sentence (1) by the following: “**1)** Equipment and equipment components, that are part of a *building service water* heating system shall comply with the efficiency requirements in the Act respecting energy efficiency and energy conservation standards for certain electrical or hydrocarbon-fuelled appliances (chapter N-1.01) and its regulations. (See Note A-5.2.12.1.(1), 6.2.2.1.(1), 7.2.3.1.(1) and 7.2.4.1.(1).)”.
6.2.2.2.	Replace “, a maximum U-value of 0.45 W /(m^2·K)” in Sentence (1) by “a minimum thermal resistance of 2.22 m^2·°C/W”.
6.2.2.3.	Strike out the Article.
6.2.2.4.	Replace the Article by the following: “**6.2.2.4. Combination Service Water Heating and Space-Heating Equipment** **1)** Combination *service water* heating and space-heating equipment is only permitted to be used where the combined maximum input capacity of air heating and *service water* heating is a) less than 44 kW, or b) less than twice the design *service water* heating load. (See Note A-6.2.2.4.(1).)”.
6.2.2.5.	Strike out the Article.
6.2.3.1.	Replace Sentence (1) by the following: “**1)** All piping conveying hot *service water* in the following systems shall be insulated in accordance with Table 6.2.3.1. and Sentences (2) to (4): a) circulating systems, b) except as provided in Sentence (5), systems with a *storage heater*, and c) systems equipped with electrical elements along pipes to maintain the temperature in the pipes. (See Note A-5.2.2.5.(2), 5.2.5.3.(8) and 6.2.3.1.(6) and Note A-6.2.3.1.(1) and (5) and 6.2.3.2.(1).)”; --- Replace Sentence (5) by the following: “**5)** In *service water* heating systems with a *storage heater*, non-circulating and equipped with *heat traps*, only the following piping sections shall be insulated in accordance with Table 6.2.3.1: a) hot water piping and cold water piping located between *heat traps* and the storage or expansion tank, b) the piping forming the *heat* traps, and

c) the first 2.4 m of the hot water piping located after the *heat* trap.

(See Note A-6.2.3.1.(1) and (5) and 6.2.3.2.(1).)";

Replace Table 6.2.3.1. by the following:

"**Table 6.2.3.1.**
Minimum Thickness of Piping Insulation for Service Water Heating Systems
Forming Part of Sentences 6.2.3.1.(1) to (3), (5) and (6)

Location of Piping	Thermal Conductivity of Insulation		Nominal Pipe Diameter, in. (mm)	Minimum Thickness of Piping Insulation, mm
	Conductivity Range, W/m·°C	Mean Rating Temperature,°C		
Conditioned space	0.035 – 0.040	38	≤ 1 (25.4)	25.4
			> 1 (25.4)	38.1
Unconditioned space or outside of the *building envelope*	0.046 – 0.049	38	≤ 2 (51)	63.5
			> 2 and ≤ 4 (> 51 and ≤ 102)	76.2
			> 4 (102)	88.9

".

Add the following Articles:

"**6.2.3.2. Heat Traps**

1) A *storage heater* or a storage tank serving a non-circulating system shall include a *heat trap* on the hot water piping and cold water piping. (See Note A-6.2.3.1.(1) and (5) and 6.2.3.2.(1).)

6.2.3.3. Equipment for Protecting the Piping Against Freezing

1) The equipment for protecting the piping outside the *building envelope* against freezing using a heating cable shall be equipped with automatic controls to shut down the equipment

a) where the outdoor temperature is more than 4.4°C, or

b) where there is no risk that the fluid in the protected piping will freeze.".

6.2.4.1. Strike out "(See Note A-6.2.4.1.(1).)" in Sentence (1).

6.2.6. Replace the Subsection by the following:

"**6.2.6. Reserved**".

6.2.7.2. Replace "have a nominal thermal transmittance of no more than 0.48 W/m^2 °C" in Sentence (2) by "shall have a thermal resistance of at least 2.08 (m^2·°C)/W".

6.2.8.1. Strike out the Article.

6.2.8.2.	Replace “and stops the system” in Sentence (1) by “and stops their pumps”; Add the following Sentence: “**3)** Booster pumps shall be stopped when there is no demand for *service water*.”.
6.3.	Replace the Section by the following: “**Section 6.3. Reserved**”.
6.4.1.1.	Strike out what follows “or 6.3.” in Sentence (1).
6.4.1.2.	Replace the Article by the following: “**6.4.1.2. Limitations** **1)** The performance path shall not take into consideration the energy performance of back-up service water heating systems. **2)** Back-up service water heating systems shall comply with Sentence 6.1.1.3.(2).”.
6.5.1.1.	Insert, in numerical order, the following Articles, objectives and functional statements in Table 6.5.1.1.: “**6.2.3.2. Heat Traps** (1) [F96-OE1.1]”; “**6.2.3.3. Equipment for Protecting the Piping Against Freezing** (1) [F95-OE1.1]”; Insert respectively, in numerical order, the following objectives and functional statements in Table 6.5.1.1.: “**6.2.8.2. Pressure Control** (3) [F96,F97-OE1.1]”; “**6.4.1.2. Limitations** (2) [F98,F99-OE1.1]”; Strike out respectively the following objectives and functional statements in Table 6.5.1.1.: “**6.2.2.4. Combination Service Water Heating and Space-Heating Equipment** (2) [F95,F96,F98,F99-OE1.1]”; Strike out the following Articles, objectives and functional statements in Table 6.5.1.1.: “**6.2.2.5. Space-Heating Equipment Used for Indirect Service Water Heating** (1) [F95, F96, F98, F99-OE1.1]”; “**6.2.4.1. Temperature Controls** (1) [F96-OE1.1]”; **“6.2.4.3. Maintaining Temperature of Hot Service Water**

	(1) [F96-OE1.1]"; "**6.2.6.1. Showers** (1) [F96-OE1.1] (2) [F96-OE1.1]"; "**6.2.6.2. Lavatories** (1) [F96-OE1.1] (2) [F96-OE1.1]"; "**6.2.8.1. Size of Water Storage Tank** (1) [F97,F99-OE1.1] (2) [F97,F99-OE1.1]"; "**6.3.1.1. Application** (1) [F96,F99-OE1.1]"; "**6.3.1.3. Compliance** (1) [F96,F99-OE1.1]"; "**6.3.2.1. SWH Trade-off Index** (1) [F96,F99-OE1.1] (2) [F96,F99-OE1.1] (3) [F96,F99-OE1.1]"; "**6.3.2.2. Determination of Peak Daily Flow Ratio** (1) [F96,F99-OE1.1]"; "**6.3.2.3. Determination of Normalized Tank Area** (1) [F96,F99-OE1.1]"; "**6.3.2.4. Determination of Normalized Tank Diameter** (1) [F96,F99-OE1.1]"; "**6.3.2.5. Determination of Trade-off Values of Components, ToV_i** (1) [F96,F99-OE1.1]"; "**6.3.2.6. Determination of Reference Heat Generator Efficiency, η_{ref}** (1) [F96,F99-OE1.1]".

Division B Part 6 Schedule A	Replace the heading of the Notes by the following: "**Notes to Part 6** **Service Water Systems and Swimming Pools**".
A-6.1.1.3.(1)	Replace "all three paths of compliance" in Sentence (1) by "both paths of compliance"; Replace Figure A-6.1.1.3.(1) by the following: " 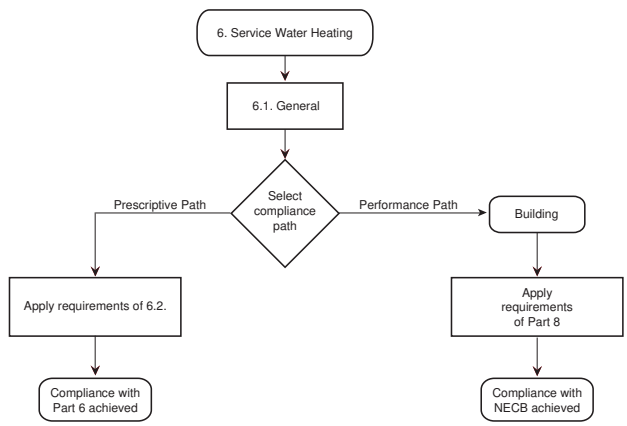 **Figure A-6.1.1.3.(1)** **Code compliance paths for service water heating**".
A-6.2.2.1.(1)	Strike out the Note.
	Add the following Note: "**A-6.2.2.4.(1) Limitations of Combination Service Water Heating and Space-Heating Equipment.** Systems designed to both heat a space and heat service water meet respectively a seasonal load and a fixed load. In the summer, where the hot service water fixed load must be satisfied, energy is wasted because the heating system is oversized in relation with the small hot service water load necessary. The purpose of Sentence 6.2.2.4.(1) is therefore to limit that practice. For example, if the system considered has a combined maximum input power of air heating and service water heating of 45 kW, Clause 6.2.2.4.(1)(b) must be complied with. To do so, the design service water heating load service water must be greater than half the power of the system, i.e. 22.5 kW. The requirement of Sentence (1) applies in particular to combined water heaters and heaters for which water is indirectly heated by a hot water system.".
A-6.2.3.1.(1)	Strike out the Note.

Add the following Note:

"**A-6.2.3.1.(1) and (5) and 6.2.3.2.(1) Heat Traps.** ASHRAE/IES 90.1, "User's Manual," defines a heat trap as follows:

"A heat trap is a device or arrangement of piping that keeps the buoyant hot water from circulating through a piping distribution system through natural convection. By restricting the flow from the storage tank, standby heat loss is minimized.

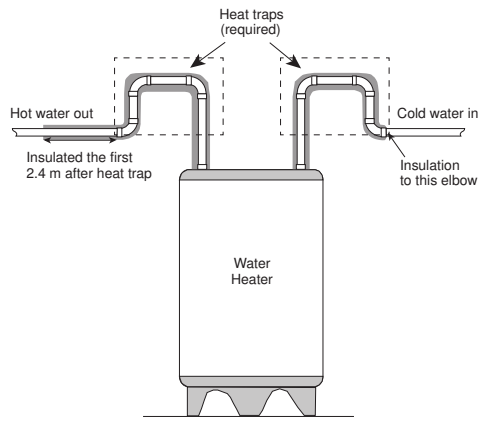

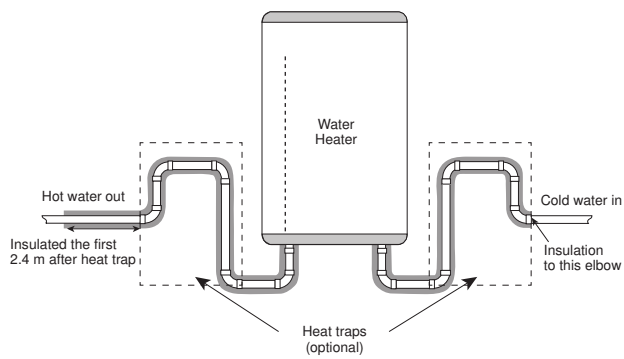

Figure A-6.2.3.1.(1) and (5) and 6.2.3.2.(1)

Heat Traps

"In all configurations heat traps can be a 360° loop of piping, a pre-manufactured device, or some arrangement of piping and elbows that forms an inverted "U" on the tank fittings. Tanks that have horizontal outlets need only a section of vertical pipe that turns downward after leaving the tank (an inverted "L")."

Figure A-6.2.3.1.(1) and (5) and 6.2.3.2.(1) illustrates two examples of site-built heat traps.".

A-6.2.4.1.(1)	Strike out the Note.

A-6.2.6.1.(1)	Strike out the Note.
A-6.2.6.1.(2) and 6.2.6.2.(2)	Strike out the Note.
A-6.2.8.1.	Strike out the Note.
A-6.2.8.2.(1)	Replace the Note by the following: "**A-6.2.8.2.(1) Sensors for Pressure Booster Systems.** Pressure booster systems should have one or more pressure sensors generally located near the fixtures that set the system design pressure, or another type of sensor capable of estimating the pressure near the fixtures.".
Division B Part 7	Replace the Part by the following: "**Part 7** **TRANSFORMERS AND ELECTRICAL MOTORS** **Section 7.1. General** **7.1.1. General** **7.1.1.1. Scope** **1)** This Part is concerned with transformers and electrical motors. **7.1.1.2. Application** **1)** Except as provided in Sentence (2), this Part applies to all transformers and electrical motors that are connected to the *building's* electrical service, including those installed outside the *building*. **2)** This Part does not apply to existing transformers and electrical motors that are extended to serve *additions*. **7.1.1.3. Compliance** **1)** Compliance with this Part shall be achieved by following a) the prescriptive path described in Section 7.2., or b) the performance path described in Section 7.4. (see Note A-3.1.1.3.(1)(c)). **7.1.1.4. Definitions** **1)** Words that appear in italics are defined in Article 1.4.1.2. of Division A. **Section 7.2. Prescriptive Path** **7.2.1. Struck out** **7.2.2. Struck out** **7.2.3. Transformers** **7.2.3.1. Transformer Selection**

1) Transformers shall conform to the efficiency requirements in the Act respecting energy efficiency and energy conservation standards for certain electrical or hydrocarbon-fuelled appliances (chapter N-1.01) and its regulations. (See Note A-5.2.12.1.(1), 6.2.2.1.(1), 7.2.3.1.(1) and 7.2.4.1.(1).)

7.2.4. Electrical Motors

7.2.4.1. Efficiency

1) Permanently wired polyphase motors serving the *building* shall have a nominal full-load motor efficiency compliant with the Act respecting energy efficiency and energy conservation standards for certain electrical or hydrocarbon-fuelled appliances (chapter N-1.01) and its regulations. (See Note A-5.2.12.1.(1), 6.2.2.1.(1), 7.2.3.1.(1) and 7.2.4.1.(1).)

Section 7.3. Reserved

Section 7.4. Performance Path

7.4.1. General

7.4.1.1. Scope

1) Where transformers and electrical motors do not comply with the requirements of Section 7.2., they shall comply with Part 8.

Section 7.5. Objective and Functional Statements

7.5.1. Objective and Functional Statements

7.5.1.1. Attributions to Acceptable Solutions

1) For the purpose of compliance with this Code as required in Clause 1.2.1.1.(1)(b) of Division A, the objective and functional statements attributed to the acceptable solutions in this Part shall be the objective and functional statements listed in Table 7.5.1.1. (See Note A-1.1.3.1.(1).)

Table 7.5.1.1.
Objectives and Functional Statements Attributed to the Acceptable Solutions in Part 7
Forming Part of Sentence 7.5.1.1.(1)

Objectives and Functional Statements[1]	
7.2.3.1. Transformer Selection	
(1)	[F97,F98-OE1.1]
7.2.4.1. Efficiency	
(1)	[F97,F98,F99-OE1.1]

[1] See Parts 2 and 3 of Division A.”.

Division B Part 7 Schedule A	Strike out the Notes in Part 7.
Division B Part 8	
8.1.1.1.	Replace the Article by the following: "**8.1.1.1. Scope** **1)** Compliance with this Code is permitted to be achieved by applying the provisions of this Part. (See Note A-1.1.2.1.).".
8.1.1.2.	Add the following line after "**8.1.1.2. Application**": "(See Note A-8.1.1.2.)"; Replace Sentence (1) by the following: "**1)** This Part applies only to *buildings* a) whose function is known, b) for which the *building envelope* is defined in the plans and specifications, and c) for which, except as provided in Sentence (2), sufficient information is known about their components, materials and assemblies that are covered by the scope of this Code."; Strike out "3.2.," in Sentence (2); Insert "and the alteration reduces the *building*'s performance" after "assessment" in Sentence (3).
8.4.1.	Add the following line after "**8.4.1. Compliance**": "(See Note A-8.4.1.)".
8.4.1.1.	Replace Sentence (1) by the following: "**1)** The performance path shall take into consideration the energy needs of the *building* components in accordance with the prescriptive requirements of Sections 3.2., 4.2., 5.2., 6.2. and 7.2. for the climate zone under consideration."; Insert ", systems" after "construction techniques" in Sentence (2); Replace Sentence (3) by the following: "**3)** *Exterior lighting* must be excluded from the performance compliance calculations.".
8.4.1.2.	Replace "Sentences (2) to (5)" in Sentence (1) by "Sentences (2) to (4)";

	Replace Sentences (3) and (4) by the following: "**3)** The number of cumulative hours during which heating or cooling needs are not met shall not exceed 300 h in a simulated year for both the proposed and reference *buildings*. (See Note A-8.4.1.2.(3) and (4).) **4)** The number of cumulative hours during which the heating or cooling needs of a proposed *building* are not met during a simulated year shall be less than or equal to the number of hours corresponding to the reference *building*. (See Note A-8.4.1.2.(3) and (4).)"; ——— Strike out Sentence (5).
8.4.1.4.	Replace the Article by the following: "**8.4.1.4. Treatment of Additions** **1)** For the purpose of performance compliance calculations, the assessment of *additions* shall be based on the *addition* being considered by itself. **2)** Where the *primary* and *secondary systems* of the existing *building* are extended to serve the *addition*, they shall be modeled for the proposed *building* a) as if they met the prescriptive requirements of the Code, or b) using the characteristics of the existing equipment (see Note A-8.4.1.4.(2)(b)). **3)** Where the party *wall* between the existing *building* and the *addition* divides *conditioned spaces* that must be maintained at temperatures varying by more than 10°C at design conditions, the thermal exchanges between the *addition* and the existing *building* shall be considered in the modeling. (See Note A-8.4.1.4.(3).)".
8.4.2.	Add the following line after "**8.4.2. Compliance Calculations**": "(See Note A-8.4.2.)".
8.4.2.2.	Replace the Article by the following: "**8.4.2.2. Calculation Methods** **1)** Except as provided in Article 8.4.3.9., only the programs that have not shown any major failure or limitation following tests provided for in ANSI/ASHRAE 140, "Standard Method of Test for the Evaluation of Building Energy Analysis Computer Programs," except Sections 7 and 8, may be used for the modeling provided for in this Part. (See Note A-8.4.2.2.(1).) **2)** The same program shall be used to determine the *annual energy consumption* of the proposed *building* and the *building energy target* of the reference *building*. **3)** The programs shall a) consider the internal loads, in particular those due to occupants, activities and processes i) using actual values, when they are known, or ii) in the absence of actual values, using representative values (see Note A-8.4.3.8.(1)), and b) include the energy consumption of the systems that have an impact on the energy consumption of the *building*, including those of i) *HVAC systems*, ii) *exterior lighting* devices, iii) *service water* heating equipment, and iv) elevators, moving walkways and escalators. (See Note A-8.4.2.2.(3).)

	4) The programs shall account for a) sensible and latent heat transfers due to the internal loads in Sentence (3) other than those of *interior lighting* devices, b) the sensible heat transfer due to *interior lighting* devices i) in their illumination space, and ii) in HVAC return air, c) the dynamic evolution of the temperature in the spaces, d) the effect of thermal mass, and e) air leaks through the *building envelope*. **5)** The programs shall be performed for a one-year period (8760 h) using time intervals no greater than one hour. **6)** Operating schedules and climatic data input in the programs shall use a time interval no greater than one hour. **7)** The internal loads shall be adjusted for each time interval referred to in Sentence (5) based on the applicable operating schedules. (See Notes A-8.4.3.2.(1) and A-8.4.3.8.(1).) **8)** Energy consumption of backup equipment is permitted to be excluded from the energy model, provided it is equipped with controls that operate the equipment only when the backed-up equipment is not operating.”.
8.4.2.3.	Replace Sentence (1) by the following: “**1)** The programs shall use as input climatic data whose temperature, humidity and insolation, derived from climatic data, a) were shown to be good representations of the climate at the *building* site compared to the average of at least 10 years of measured data, and b) were collected at the weather station nearest to the *building* site.”; --- Replace “the energy model calculations shall be performed using” in Sentence (2) by “the programs shall consider as input”.
8.4.2.4	Strike out the Article.
8.4.2.5.	Strike out the Article.
8.4.2.6.	Replace the words “energy model calculations” wherever they appear in Sentences (1) and (2) by “programs”.
8.4.2.7.	Strike out the Article.

8.4.2.8.	Replace the Article by the following: "**8.4.2.8. Building Envelope** (See Note A-8.4.2.8.) **1)** Programs shall account for heat transfers through the *building envelope*, due to solar radiation and indoor and outdoor temperature difference of the *building envelope*. **2)** Programs shall account for the thermodynamic behaviour of *opaque building assemblies* and other assemblies such as indoor floors and walls. **3)** Programs shall account for heat transfers due to solar absorptance and transmittance and the orientation and optical characteristics of each surface. **4)** Except as provided in Sentence 8.4.3.3.(6), the *effective thermal resistance* of *opaque building assemblies* shall be derated in accordance with Sentences 3.3.1.3.(2) and (3). (See Note A-8.4.2.8.(4).) **5)** The derated *effective thermal resistance*, calculated in accordance with Sentence (4), may be determined for an entire *opaque building assembly*, provided that the adjacent *temperature-control zones* are maintained at temperatures that vary by not more than 10°C. (See Note A-8.4.2.8.(5).)".
8.4.2.9.	Replace the Article by the following: "**8.4.2.9. Manually Operated Shading Devices** **1)** The energy model shall not include the effect of manually operated shading devices such as blinds and shades.".
8.4.2.10.	Replace the Article by the following: "**8.4.2.10. HVAC Systems** **1)** *HVAC systems* shall be modeled in *primary* systems or *secondary systems* according to the established program conventions, without substituting their components with thermodynamically similar components or using approximated calculations. **2)** Programs shall account for the effect of *primary systems* and *secondary systems* on supply and return air temperature and on that of *conditioned spaces* including a) temperature rise of air due to heat from constant, variable or multiple speed fans, b) fan power as a function of modulation of supply airflow, c) temperature or humidity rise or drop of supply or return air due to sensible and latent heat transferred from a heat-recovery device, and d) temperature rise of the outdoor air due to preheaters. **3)** Programs shall account for the variation of efficiency and capacity of the *HVAC systems* as a function of part load of the systems. (See Note A-8.4.2.10.(3).) **4)** Where the program requires an individual efficiency rate of an equipment component of an *HVAC system*, the global efficiency rate of the equipment shall be adjusted accordingly before being entered into the program. (See Note A-8.4.2.10.(4).) **5)** Programs shall be able to assess the peak load according to the design conditions and to size accordingly the equipment and other components of the *HVAC system*.".
8.4.3.1.	Replace "specifications" in Sentence (2) by "plans and specifications": --- Replace Clauses (2)(c) to (2)(e) by the following:

	"c) the delimitation of the *temperature-control zones*, d) *HVAC system* types, capacities and controls, e) *service water* heating system types, capacities and controls, and f) electrical systems."; Strike out Sentences (3) to (8).
8.4.3.2.	Replace the Article by the following: "**8.4.3.2. Operating Schedules** **1)** The operating schedules of the energy model shall be established a) using the planned operating schedules, where they are known, or b) in the absence of planned operating schedules, using operating schedules representative of the type of proposed *building* or functions of spaces. (See Note A-8.4.3.2.(1).)".
8.4.3.3.	Replace "a *building envelope* component" in Sentence (1) by "an *opaque building assembly*"; Replace Sentences (2) and (3) by the following: "**2)** Where the modeler takes into account *fenestration* shading effects, the following conditions shall be complied with: a) the energy model shall include permanent shading devices, such as sun screens and reflective sills, and automated shading devices, b) the energy model shall include the surrounding shading effects from, for example, nearby *buildings* and landscaping elements, c) the energy model shall include the shading effects from the *building* itself, for example, caused by balconies, overhanging floors and the other wings of the *building*, d) the solar heat gain and the visible solar transmittance coefficient of the *fenestration* of all the *building* shall be multiplied by an adjustment factor of 0.9. (See Note A-8.4.3.3.(2).) **3)** Where the modeler does not take into account *fenestration* shading effects, a) the solar heat gain coefficient and the visible solar transmittance coefficient of the *fenestration* of all the *building* shall be multiplied by an adjustment factor of 0.8 (see Note A-8.4.3.3.(3)(a)), and b) two adjacent outside surfaces whose azimuth or slope differ by not more than 45° may be modeled as a single surface. **4)** The air leakage rate of the total above-ground gross areas of walls and roofs shall be set to a constant value of 0.25 L/(s·m²). (See Note A-8.4.3.3.(4).) **5)** Where an *opaque building assembly* covers less than 5% of the total area of a wall or roof, the assembly may be excluded from the energy model, provided that the area is included in the adjacent *opaque building assembly* with a) an *effective thermal resistance* that differs by less than 20%, and b) an azimuth or slope that differs by not more than 45°. **6)** Where multiple *opaque building assemblies* have the same orientation, the energy model may use the same derated *effective thermal resistance* value for those assemblies, calculated as provided in Sentence 3.3.1.3.(2) using a) the following three values:

i) the least performing *effective thermal resistance*, RSI_{Ei}, in (m²·°C)/W, of the *opaque building assemblies*,

ii) the least performing *linear thermal transmittance*, Ψ, en W/(m·°C), of the *opaque building assemblies* for each of the types of intersections, and

iii) the least performing *point thermal transmittance*, χ, in W/°C, of the *opaque building assemblies* for each of the types of penetrations, or

b) the following three values:

i) the weighted *effective thermal resistance*, $RSI_{Eweighted}$, in (m²·°C)/W, calculated using the following equation:

$$RSI_{Eweighted} = \frac{\sum_{i=1}^{n}(A_i)}{\sum_{i=1}^{n}\left(\frac{A_i}{RSI_{Ei}}\right)}$$

where

n = total number of *opaque building assemblies*,

A_i = area of *opaque building assembly* i, calculated in accordance with the requirements of Article 3.1.1.6., in m², and

RSI_{Ei} = *effective thermal resistance* of *opaque building assembly* i, in (m²·°C)/W,

ii) the weighted *linear thermal transmittance* for each of the types j intersections, $\Psi_{weighted,j}$, in W/(m·°C), calculated using the following equation:

$$\Psi_{weighted,j} = \frac{\sum_{i=1}^{n}(\Psi_i \cdot L_i)}{\sum_{i=1}^{n}(L_i)}$$

where

n = total number of *opaque building assemblies*,

Ψ_i = *linear thermal transmittance* of the type j intersection present on *opaque building assembly* i, in W/(m·°C), and

L_i = length of the type j intersection occurring on *opaque building assembly* i, in m, and

iii) the weighted *point thermal transmittance* for each of the types j penetrations, $\chi_{weighted,j}$, in W/°C, calculated using the following equation:

$$\chi_{weighted,j} = \frac{\sum_{i=1}^{n}(\chi_i \cdot N_i)}{\sum_{i=1}^{n}(N_i)}$$

where

n = total number of *opaque building assemblies*,

χ_i = *point thermal transmittance* of the type j penetration occurring on *opaque building assembly* i, in W/°C, and

N_i = number of type j point penetrations occurring on the *opaque building assembly*.

7) Performance exchanges with *opaque building assemblies* in contact with the ground may be considered in the model on the following conditions:

a) the program shall not use methods based on regression analyses or on analytical calculations to calculate the annual heat transfer of *opaque building assemblies* in contact with the ground,

b) the program shall permit accurate modeling of the arrangement of the insulation and the properties of *opaque building assemblies* in contact with the ground, and

c) the calculation methods implemented by the programs shall be identical for the proposed and reference *buildings*.

(See Note A-8.4.3.3.(7).)

8) Where the *effective thermal resistance* of the opaque section of curtain walls has not been determined in accordance with Sentence 3.1.1.5.(6), the values in Sentence 3.3.1.3.(4) shall be used in the proposed *building*.".

8.4.3.4.

Replace Sentences (2) to (4) by the following:

"**2)** Where the proposed *building* contains controls based on space occupancy, personal controls or photocontrols, the lighting power connected to the control shall be multiplied by the factor for occupancy control, $F_{occ,i}$, the factor for personal control, $F_{pers,i}$, and the factor for photocontrol, F_{pho}, as determined in accordance with the following equations:

a) for the factor for occupancy control, $F_{occ,i}$:

$$F_{occ,i} = 1 - \left(C_{A,i} \cdot C_{occ,ctrl,i}\right)$$

where

$C_{A,i}$ = factor to account for the relative absence of occupants in the space determined using Table 8.4.3.4.-A,

$C_{occ,ctrl,i}$ = factor to account for the occupancy-sensing mechanism determined using Table 8.4.3.4.-B,

b) for the factor for personal control, $F_{pers,i}$:

$$F_{pers,i} = 1 - C_{pers,ctrl,i}$$

where

$C_{pers,ctrl,i}$ = factor to account for personal control determined using Table 8.4.3.4.-A, and

c) for the factor for photocontrol, $F_{pho,i}$:

$$F_{pho,i} = 1 - C_{pho,i}$$

where

$C_{pho,i}$ = factor to account for the reduction of photocontrol power determined in accordance with Sentence (3).

(See Note A-8.4.3.4.(2).)

Table 8.4.3.4.-A
Factors for Relative Absence of Occupants and Personal Control According to Space Type
Forming Part of Sentence 8.4.3.4.(2)

Space Types	Factors	
	Relative Absence of Occupants, $C_{A,i}$	Personal Control[1], $C_{pers,ctrl,i}$
Common Space Types		
Atrium	0	0 0.1 where C2
Audience seating area – permanent		
for auditorium	0.3	0
for convention centre	0.2	0
for gymnasium	0	0
for motion picture theatre	0	0
for penitentiary	0	0
for performing arts theatre	0	0
for religious building	0.3	0
for sports arena	0	0

other	0	0
Banking activity area	0	0
Classroom/Lecture hall/Training room		
for penitentiary	0.5	0 0.1 where C2
other	0.5	0 0.1 where C2
Conference/Meeting/Multi-purpose room	0.5	0 0.1 where C2
Confinement cell	0	0
Copy/Print room	0.2	0
Corridor/Transition area		
for hospital	0	0 0.1 where C2
for manufacturing facility	0	0 0.1 where C2
for space designed to ANSI/IES RP-28, "Lighting and the Visual Environment for Senior Living," and used primarily by residents	0	0 0.1 where C2
other	0	0 0.1 where C2
Courtroom	0.2	0 0.1 where C2
Dining area		
for bar lounge/leisure dining	0	0 0.1 where C2
for cafeteria or fast-food dining	0	0 0.1 where C2
for family dining	0	0 0.1 where C2
for penitentiary	0	0 0.1 where C2
for space designed to ANSI/IES RP-28, "Lighting and the Visual Environment for Senior Living," and used primarily by residents	0	0 0.1 where C2
other	0	0 0.1 where C2
Dressing room for performing arts theatre	0.4	0
Electrical/Mechanical room	0.9	0
Emergency vehicle garage	0.5	0 0.1 where C2
Food preparation area	0	0
Guest room	0	0
Laboratory		
for classroom	0.4	0 0.1 where C2
other	0	0
Laundry/Washing area	0	0
Loading dock – interior	0	0
Lobby		

for elevator	0	0 0.1 where C2
for hotel	0	0 0.1 where C2
for motion picture theatre	0	0 0.1 where C2
for performing arts theatre	0	0 0.1 where C2
for space designed to ANSI/IES RP-28, “Lighting and the Visual Environment for Senior Living,” and used primarily by residents	0	0 0.1 where C2
other	0	0 0.1 where C2
Locker room	0.5	0
Lounge/Break room		
for health care facility	0	0
other	0	0
Office		
enclosed	0.3	0 0.05 where C1 or C2
open plan	0.2	0 0.05 where C1 or C2 0.25 where C3 0.3 where C4
Pharmacy area	0	0
Sales area	0	0
Seating area - general	0	0
Server room	0.7	0
Stairway, except stairwell	0	0
Stairwell	0	0
Storage garage - interior	0.4	0 0.1 where C2
Storage room	0.6	0
Vehicle maintenance area	0	0
Washroom		
for space designed to ANSI/IES RP-28, “Lighting and the Visual Environment for Senior Living,” and used primarily by residents	0.5	0
other	0.5	0
Workshop	0	0
Building-Specific Space Types		
Convention centre –exhibit space	0	0
Dormitory – living quarters	0	0
Fire station – sleeping quarters	0	0
Gymnasium/Fitness centre		
exercise area	0	0.1 where C2
playing area	0	0.1 where C2

Health care facility		
exam/treatment room	0.3	0
imaging room	0	0
medical supply room	0.5	0
nursery	0	0
nurses' station	0	0
operating room	0.1	0
patient room	0.1	0
physical therapy room	0.2	0
recovery room	0	0
Library		
reading area	0	0
stacks	0	0
Manufacturing facility		
detailed manufacturing area	0	0
equipment room	0.2	0
extra high bay area (> 15 m floor-to-ceiling height)	0	0
high bay area (7.5 m to 15 m floor-to-ceiling height)	0	0
low bay area (< 7.5 m floor-to-ceiling height)	0	0
Museum		
general exhibition area	0.2	0
restoration room	0.3	0
Post office - sorting area	0	0
Religious building		
fellowship hall	0.3	0
worship/pulpit/choir area	0.1	0
Retail facility		
dressing/fitting room	0.4	0
mall concourse	0	0 0.1 where C2
Space designed to ANSI/IES RP-28, "Lighting and the Visual Environment for Senior Living"		
chapel used primarily by residents	0.5	0
recreation room used primarily by residents	0.2	0
Sports area – playing area		
playing area with facilities for more than 5000 spectators	0	0

playing area with facilities for more than 2000 spectators and not more than 5000 spectators	0	0
playing area with facilities for more than 200 spectators and not more than 2000 spectators	0	0
playing area with facilities for less than 200 spectators or without a facility for spectators	0	0
Transportation facility		
airport concourse	0	0
baggage/carousel area	0	0
terminal ticket counter	0	0
Warehouse – storage area		
medium to bulky palletized items	0.5	0
small hand-carried items(1)	0.5	0

(1) See Note A-Table 4.2.1.6.
(2) Controls C1, C2, C3 and C4 are defined in Table 4.2.1.6.

Table 8.4.3.4.-B
Factor to Account for Occupancy-Sensing Mechanism, $C_{occ,ctrl,i}$
Forming Part of Sentences 8.4.3.4.(2) and 8.4.4.5.(3)

Occupancy-Sensing Mechanism	$C_{occ,ctrl,i}$
Automatic full off (full on)	0.67
Automatic full off (restricted to manual on or automatic partial on)	0.75
Automatic partial off (restricted to manual on)	0.34
Manual (on/off or bi-level)	0.30
None	0

Table 8.4.3.4.-C
Factor to Account for Reduction of Photocontrol Power, $F_{pho,i}$
Forming Part of Sentences 8.4.3.4.(2) and (3)

Photocontrol Mechanism	$C_{occ,ctrl,i}$
Bi-level photocontrol	0.1
Continuous dimming photocontrol	0.3
Multi-level photocontrol	0.2
None	0

3) The factor for photocontrol, $F_{pho,i}$, may be determined by

a) Table 8.4.3.4.-C, or

b) a program whose functions consist in performing detailed calculations of daylighting and the dynamic response of photocontrols.

4) The use of the factor for photocontrol, $F_{pho,i}$, is permitted to reduce the *power* of *installed interior lighting*

a) where lighting devices are in a daylighted space and are connected to photocontrols, and

b) where the setpoint of lighting devices connected to photocontrols is representative of the use of the space without task lighting.

(See Note A-8.4.3.4.(4).)".

8.4.3.5. Replace "a gas-fired" in Sentence (2) by "an electrical";

	Replace Clause (2)(b) by the following: “b) has a constant efficiency of 100% independently from the load.”; Replace “a gas-fired” in Sentence (4) by “an electrical”; Replace Clause (4)(b) by the following: “b) has a constant efficiency of 100% independently from the load.”; Insert “proposed” before “storage tank” in Clause (4)(c).
8.4.3.6.	Replace the Article by the following: “**8.4.3.6. HVAC Systems** **1)** Except as provided in Sentence (2), the program shall provide that the exhaust airflow and outdoor air ventilation of each *HVAC system* are minimum flows required by the NBC. (See Note A-8.4.3.6.(1).) **2)** For the purposes of the energy model, it is permitted to consider that the air distribution flow of a *temperature-control zone* of the proposed *building* be divided by 1.2 a) where the distribution air is circulated i) through the floor, ii) at a temperature less than that of the *temperature-control zone*, iii) unidirectionally, and iv) at low velocity, and b) where return air is captured by the ceilings. (See Note A-8.4.3.6.(2).) **3)** Part-load operation of HVAC equipment of the proposed *building* shall be modeled a) from the equipment technical characteristics, where they are known and the program is able to model the part load of HVAC equipment, or b) in other cases i) in accordance with the performance curves under part load in Tables 8.4.4.21.-A to 8.4.4.21.-I, or ii) with the operating curves under default part load provided for in the programs provided that they are representative. (See Note A-8.4.3.6.(3).) **4)** Except as provided in Sentence (5), the static pressure of an HVAC fan of the proposed *building* may be adjusted using the values in Table 5.2.3.1., if applicable. **5)** The adjustment of fan static pressure is not permitted a) where the total of the rated capacity of the fans before adjustment is less than 4 kW, or b) where the total of the capacities meets the limit of the rated capacity of Clause 5.2.3.2.(1)(a) or 5.2.3.3.(1)(a).”.
8.4.3.7.	Replace the Article by the following: “**8.4.3.7. Temperature-Control Zones** **1)** Each *temperature-control zone* of the proposed *building* shall be modeled in one of the following manners:

	a) heated, if only heating *HVAC systems* are provided or planned, b) cooled, if only cooling *HVAC systems* are provided or planned, or c) heated and cooled, if heating and cooling *HVAC systems* are provided or planned. **2)** Except as provided in Sentence (4), where the spaces served by the *HVAC system* are specified in the plans and specifications, each space shall be modeled as a single *temperature-control zone*. **3)** Except as provided in Sentence (4), where the spaces served by the *HVAC system* are not entirely specified in the plans and specifications, the spaces shall be modeled in several *temperature-control zones* delimited as follows: a) an indoor *temperature-control zone*, delimited at 4.5 m from the outdoor glazed facade, b) one or more peripheral *temperature-control zones* delimited between i) the indoor *temperature-control zone* in Clause (a), ii) the outdoor glazed facades, and iii) the location where the azimuth of an outdoor glazed facade varies by more than 45° in relation to another adjacent outdoor glazed facade, and c) *temperature-control zones* delimited by *storey*. (See Note A-8.4.3.7.(3).) **4)** The grouping of *temperature-control zones* in *thermal blocks* is permitted.”.
8.4.3.8.	Replace the Article by the following: “**8.4.3.8. Internal and Service Water Heating Loads** **1)** The internal loads and the needs in *service water* used in calculating energy compliance shall be representative of the functions of the spaces or the type of proposed *building*. (See Note A-8.4.3.8.(1).)”.
8.4.3.9.	Replace the Article by the following: “**8.4.3.9. Energy Recovered on Site and Renewable Energy Produced on Site** **1)** Where the proposed *building* uses technologies for recovering energy that is not required in Subsection 5.2.10., it is permitted to subtract that energy from the *annual energy consumption* if it is not intended for sale. (See Note A-8.4.3.9.(1) and (2).) **2)** Where the proposed *building* uses technologies for producing renewable energy on site, it is permitted to subtract that energy from the *annual energy consumption*, up to 5% of the *annual energy consumption*, if it is not intended for sale. (See Note A-8.4.3.9.(1) and (2).) **3)** Where the program in Article 8.4.2.2. does not have the function of modeling the technology in Sentences (1) and (2), it is permitted to quantify the energy recovered on site or the renewable energy produced on site by using another tool or another calculation method covering a one-year period (8760 h).”.
8.4.4.1.	Add “(See Note A-8.4.4.1.(2).)” at the end of Sentence (2); Insert “and in Subsection 8.4.3.” after “this Subsection” in Sentence (4); Replace Clauses (c) to (e) in Sentence (4) by the following: “c) number, type and need for heating or cooling *thermal blocks* and *temperature-control zones*, d) shape and exterior dimensions, including contiguous ground level,

e) orientation,

f) air leakage rates,

g) solar heat gain coefficient and visible solar transmittance coefficient of *fenestration*,

h) *fenestration* shading effects due to surrounding elements and those from the *building* itself,

i) insulation arrangement and *effective thermal resistance* of *opaque building assemblies* in contact with the ground,

j) thermal mass of *building envelope*,

k) operating schedules,

l) setpoint temperatures and humidity of spaces,

m) setpoint *service water* heating temperature,

n) temperature of water from the public distribution network or a private source,

o) plug loads,

p) values associated to activities and processes, such as power, energy sources and heat produced,

q) *HVAC systems* associated only to processes,

r) densities of *installed interior lighting power* of *dwelling units*,

s) factor for occupancy control determined in accordance with Clause 8.4.3.4.(2)(a),

t) radiating and convective distribution of heat gains emitted by lighting,

u) *interior lighting* for the functions, spaces or equipment referred to in Sentence 4.2.1.4.(4),

v) occupancy densities,

w) sensible heat and latent heat produced by occupants,

x) location, orientation and dimensions of *fenestration*, and

y) thermal properties of ground, such as thermal conductivity, specific heat and density.

(See Note A-8.4.4.1.(4).)";

Replace Sentences (5) to (7) by the following:

"**5)** Climatic data used in compliance calculations for the proposed *building* shall be applied as being identical in the reference *building*.

6) Where the proposed *building* uses an energy souce, that energy source shall also be present for the same purposes in the modeling of the reference *building*.

7) Where the proposed *building* uses more than one energy source, the power ratios between the energy sources and priority of use of those sources in the proposed *building* shall be modeled as being identical in the reference *building*.

8) Except as provided in Sentence (9), the energy efficiency of the reference *building* equipment shall

a) comply with Articles 5.2.12.1., 6.2.2.1., 7.2.3.1. and 7.2.4.1., or

b) in the absence of applicable values under Clause (a), be identical to that of the proposed *building's* corresponding equipment.

9) The use, in modeling the reference *building*, of the minimum equipment energy efficiency provided for in the Energy Efficiency Act (S.C. 1992, c. 36) and its regulations, is permitted

a) where that equipment is covered by the Energy Efficiency Act (S.C. 1992, c. 36) and its regulations, and

	b) where that equipment is not covered by the Act respecting energy efficiency and energy conservation standards for certain electrical or hydrocarbon-fuelled appliances (chapter N-1.01) and its regulations. (See Note A-8.4.4.1.(8).)”.
8.4.4.2.	Strike out the Article.
8.4.4.3.	Replace the Article by the following: “**8.4.4.3. Building Envelope Components** **1)** The solar absorptance of *opaque building assemblies* shall be set at 0.7. **2)** Where, in the proposed *building*, the ratio in Sentence 3.2.1.4.(1) is greater than 40%, the ratio shall be set, in the reference *building*, at 40% of the gross wall area a) by proportionally reducing the area of each of the doors and each of the *fenestration* elements, excluding *skylights*, and b) so that the relative opening proportion on each of the proposed *building* orientations is identical to that of the reference *building*. **3)** Where, in the proposed *building*, the ratio in Sentence 3.2.1.4.(2) is greater than 3%, the ratio shall be set, in the reference *building*, at 3% of the gross roof area of each of the *skylights*. **4)** Modeling permanent shading devices such as sun breakers and reflecting sills, and automated shading devices is not permitted. (See Note A-8.4.4.3.(4).) **5)** Where performance exchanges with *opaque building assemblies* in contact with the ground shall be considered in the proposed *building*, in accordance with Sentence 8.4.3.3.(7), those assemblies shall be modeled in the reference *building* so as to comply with the requirements of Subsection 3.2.3.”.
8.4.4.4.	Replace Sentence (1) by the following: “**1)** The thermal characteristics of the reference *building's building envelope* is permitted to be modeled as being identical to those of lightweight construction having a weight of 55 kg/m² and a thermal capacity of 50 kJ/(m²·°C). (See Note A-8.4.4.4.(1).)”.
8.4.4.5.	Replace Sentence (3) by the following: “**3)** Where controls based on space occupancy are provided in the proposed *building*, the lighting power related to that control in the reference *building* shall be multiplied by the same factor for occupancy control, $F_{occ,i}$, as determined in accordance with Article 8.4.3.4. for the appropriate occupancy-sensing mechanism.”; Strike out Sentences (4) to (12).
8.4.4.6.	Replace the Article by the following: “**8.4.4.6. HVAC Systems and Service Water Heating Systems** **1)** The reference *building's* corresponding equipment shall be modeled as being identical to that of the proposed *building* a) where the heating equipment of the proposed *building* uses purchased energy, or b) where the cooling equipment of the proposed *building* uses purchased energy.

	2) Where the proposed *building* uses a heat pump for heating air or water, the reference *building's* corresponding equipment shall a) be sized for the peak heating load of the heating system, in accordance with Sentence 8.4.2.10.(5), and b) use electricity as energy source and be modeled i) in a hydronic loop compliant with the requirements of Sentence 8.4.4.9.(2), where the heat pump is on a water loop, a water-source or ground-source, or ii) as equipment with an electric resistance in accordance with the requirements of Sentence 8.4.4.9.(4), in the case of an air-source heat pump. (See Note A-8.4.4.6.(2) and (3).) **3)** Where the proposed *building* uses a heat pump for cooling air or water, the reference *building's* corresponding equipment shall be a chiller and shall a) be sized for the peak cooling load of the cooling system, in accordance with Sentence 8.4.2.10.(5), and b) use electricity as energy source and be modeled as i) an air chiller, in accordance with Sentence 8.4.4.10.(2), where the heat pump is a water-source or ground-source heat pump, ii) a water chiller, in accordance with Sentence 8.4.4.10.(2), where the heat pump is a water-loop heat pump, or iii) a direct-expansion chiller, in accordance with Sentence 8.4.4.10.(3), where the heat pump is an air heat pump, and c) have a *COP* varying depending on the load. (See Note A-8.4.4.6.(2) and (3).) **4)** The capacity or flow of an equipment of the *HVAC system* of the reference *building* shall be proportionally adjusted a) where the capacity or flow of the proposed *building's* equipment is automatically sized by the program, and b) where that capacity or flow differs from the value in the plans and specifications. (See Note A-8.4.4.6.(4).) **5)** The performance characteristics of *HVAC systems* and *service water* heating devices shall be modeled in accordance with part-load performance curves in Tables 8.4.4.21.-A. to 8.4.4.21.-I. **6)** The reference *building's* fans of the *HVAC system* shall a) comply with the requirements of Subsection 5.2.3., or b) where Subsection 5.2.3 does not apply, have a “peak/flow power demand” identical to that of the proposed *building's* corresponding fans. **7)** The reference *building's HVAC systems* shall comply with the requirements of Subsection 5.2.10. **8)** Where the proposed *building* is provided with a commercial cooking ventilation system, the system referred to in Sentence 5.2.13.1.(2) shall be modeled in the reference *building* so that exhaust and compensation flows are reduced to 50% of the rated flows during half of the operating hours. **9)** The equipment of the *HVAC system* modeled in the reference *building* shall be controlled in accordance with the requirements of Subsection 5.2.8.”.

8.4.4.7.

Replace the Article by the following:

"**8.4.4.7. HVAC System Selection**

1) Each *primary system* or *secondary system* of the proposed *building* shall have a corresponding *primary system* or a *secondary system* for the reference *building* determined in accordance with Sentences (2) to (4).

2) Except as stated otherwise in this Subsection, each air distribution system modeled in the proposed *building* shall be present in the modeling of the reference *building*. (See Note A-8.4.4.7.(2) and (3).)

3) Except as stated otherwise in this Subsection, each hydronic loop of the proposed *building* shall be present in the modeling of the reference *building*. (See Note A-8.4.4.7.(2) and (3).)

4) Each *HVAC system* of the proposed *building* shall be modeled using the reference *building's* corresponding *HVAC system*, determined in accordance with Table 8.4.4.7.-A, the corresponding descriptions shown in Tables 8.4.4.7.-B to 8.4.4.7.-E.

Table 8.4.4.7.-A
HVAC System Selection for the Reference Building
Forming Part of Sentence 8.4.4.7.(4)

Type of Dominating Cooling of the *Temperature-control Zone*	Type of Dominating Heating of the *Temperature-control Zone*	Outdoor Air Supplied to the *Temperature-control Zone* Serving:	
		Only the *Temperature-control Zone*	Other *Temperature-control Zones*
Primary system distributing cooled air	*Primary system* distributing heating air or air heated by a powered box	S1a/S1b – Single-zone	S2a/S2b – Multi-zone
	Forced convection *secondary system*	S1c – Single-zone	S2a/S2b/S2c – Multi-zone
	Single natural convection *secondary system*	S1a/S1b – Single-zone	S2a/S2b – Multi-zone
Forced *secondary system*	*Primary system* distributing heating air or air heated by a powered box	S1c – Single-zone	S2c – Multi-zone
	Forced convection *secondary system*	S3a – 100% outdoor air with local ventilation	S3b – 100% outdoor air with local ventilation
	Single natural convection *secondary system*	S3a – 100% outdoor air with local ventilation	S3b – 100% outdoor air with local ventilation
Secondary induction system	All types of heating	S1b – Single-zone	S2b – Multi-zone
No cooling	*Primary system* distributing heating air or air heated by a powered box	S1d – Single-zone	S2d – Multi-zone
	Forced convection *secondary system*	S3a – 100% outdoor air with local ventilation	S3b – 100% outdoor air with local ventilation
	Single natural convection *secondary system*	S4a – 100% outdoor air without local ventilation	S4b – 100% outdoor air without local ventilation

Table 8.4.4.7.-B
S1a, S1b, S1c and S1d Systems – Single-zone, Single-sleeve, Constant Flow
Forming Part of Sentences 8.4.4.7.(4) and 8.4.4.18.(4)

Description	Constant-air-volume system that varies the supply temperature. Control of the system is provided by a zone thermostat. It may be a combined heating and conditioning system installed on the roof or an integrated system served by a chiller-boiler assembly.

Supply airflow	Constant, as defined in Article 8.4.4.18.
Supply air temperature	Variable according to the load of the *temperature-control zone*.
Primary system supply fan	S1a – If the cooling system of the proposed *building* is direct-expansion, the supply fan must provide a static pressure of 325 Pa and have a combined energy efficiency of at least 40%.
	S1b – If the cooling system of the proposed *building* is hydronic, the supply fan must provide a static pressure of 500 Pa and have a combined energy efficiency of at least 50%.
	S1c and S1d – If cooling or heating of the zone is provided only by a forced or natural convection *secondary system*, or if the proposed *building* does not have a cooling system, the supply fan must provide a static pressure of 200 Pa and have a combined energy efficiency of at least 40%.
	For S1a, S1b, S1c and S1d: – if the proposed *building* has a return fan, the reference *building* shall be modeled with a return fan providing a static pressure of 150 Pa and having an energy efficiency of at least 25%; – possibility of adjusting the reference static pressure in accordance with Sentence 8.4.4.18.(4).
Local fan	S1c – *Secondary system* fan providing the cooling or heating forced convection of the zone. The fan must provide a power of 0.6 W/L/s. Operates on demand when the system is operating.
Outdoor air	Constant outdoor air supply corresponding to the outdoor airflow required in the NBC to maintain acceptable indoor air quality in the *temperature-control zone*, where Article 5.2.2.7. does not apply. Where Article 5.2.2.7. applies, the supply is 100% of outdoor air controlled by a fixed dry bulb in accordance with Table 5.2.2.8.-A. The economizer system is integrated with the mechanical cooling in accordance with Article 5.2.2.7.(3).
Operating schedule	As described in Article 8.4.3.2.
Heating system	As described in Article 8.4.4.9.
Cooling system	As described in Article 8.4.4.10.

Table 8.4.4.7.-C
S2a, S2b, S2c and S2d Systems – Multi-zone, Single-sleeve, Variable Flow
Forming Part of Sentences 8.4.4.7.(4) and 8.4.4.18.(3)

Description	Variable-air-volume and constant supply temperature system. The airflow is determined by the zone variable-air-volume powered boxes. It may be a combined heating and conditioning system installed on the roof or an integrated system served by the *primary systems* of a chiller-boiler assembly type.
Secondary system powered boxes	If the proposed *building's temperature-control zone* is supplied by powered boxes with fan, – refer to Sentence 8.4.4.17.(5) to size the minimum and maximum flow of the powered box, – the powered box fan must provide a combined power of 0.74 W/L/s.
	If the proposed *building's temperature-control zone* is supplied by powered boxes without fan, – refer to Sentence 8.4.4.17.(4) to size the minimum and maximum flow of the powered box, – if the powered box is controlled by a direct digital control system, the static pressure setpoint shall be adjusted in accordance with Sentence 5.2.3.3.(5).
Primary system supply airflow	Variable, maximum flow as defined in Article 8.4.4.18.
Primary system supply air temperature	Variable according to outdoor temperature, – if the outdoor temperature is less than 13°C, the supply temperature is 18°C; – if the outdoor temperature is greater than 18°C, the supply temperature is 13°C;

	– where the outdoor temperature is between 13°C and 18°C, the supply temperature varies linearly between 18°C and 13°C.
Primary system supply fan	S2a – If the proposed *building's* cooling system is direct-expansion, the supply fan must provide a static pressure of 750 Pa and have a combined energy efficiency of 45%; if the proposed *building* has a return fan, the reference *building* shall be modeled with a return fan providing a static pressure of 150 Pa and have an energy efficiency of at least 25%.
	S2b – If the proposed *building's* cooling system is hydronic, the supply fan must provide a static pressure of 1000 Pa and have a combined energy efficiency of 55%; if the proposed *building* has a return fan, the reference *building* shall be modeled with a return fan providing a static pressure of 250 Pa and have an energy efficiency of at least 45%.
	S2c and S2d – If the zone cooling or heating is provided only by a forced or natural convection *secondary system*, or if the proposed *building* does not have a cooling system, the supply fan must provide a static pressure of 620 Pa and have a combined energy efficiency of 40%; if the proposed *building* has a return fan, the reference *building* shall be modeled with a return fan providing a static pressure of 150 Pa and have an energy efficiency of at least 25%.
	For S2a, S2b, S2c and S2d: – possibility of adjusting the reference static pressure as described in Sentence 8.4.4.18.(4), – part-load curve as described in Table 8.4.4.21.-I, – the supply fan shall be modeled as a forward curved fan with inlet vanes.
Local fan	S2c – *Secondary system* fan providing the cooling or heating forced convection of the zone. The fan shall provide a power of 0.6 W/L/s. Operates on demand where the system is operating.
Outdoor air	Constant outdoor air supply corresponding to the oudoor airflow required in the NBC, to maintain acceptable indoor air quality in the *temperature-control zone*, where Article 5.2.2.7. does not apply. Where Article 5.2.2.7. applies, the supply is 100% outdoor air controlled by a fixed dry bulb in accordance with Table 5.2.2.8.-A. The economizer system is integrated with the mechanical cooling in accordance with Article 5.2.2.7.(3).
Operating schedule	As described in Article 8.4.3.2.
Heating system	As described in Article 8.4.4.9.
Cooling system	As described in Article 8.4.4.10.

Table 8.4.4.7.-D
S3a, S3b Systems – 100% Outdoor Air with Local Ventilation for Heating
Forming Part of Sentences 8.4.4.7.(4) and 8.4.4.18.(3)

Description	System conveying 100% outdoor air to the *temperature-control zone*.
Outdoor airflow	Constant, as defined in Article 8.4.4.18.
Primary system supply air temperature	Identical to that of the proposed *building*.
Primary system supply fan (100% outdoor air)	Operates continually when the system is operating.
	S3a – If the supply fan supplies only that *temperature-control zone*, the supply fan must provide a static pressure of 150 Pa and have a combined energy efficiency (fan-motor-drive) of at least 20%, without return fan.
	S3b – If the supply fan supplies several *temperature-control zones*, the supply fan must provide a static pressure of 325 Pa and have a combined energy efficiency of at least 40%, without return fan.
	Possibility of adjusting the static pressure as described in Sentence 8.4.4.18.(4).
Local fan	Fan providing a power of 0.6 W/L/s. Operates on demand where the system is operating.
Outdoor air	Constant outdoor air supply corresponding to the outdoor airflow required in the NBC to maintain acceptable indoor air quality in the *temperature-control zone*.

Operating schedule	As described in Article 8.4.3.2.
Heating system	As described in Article 8.4.4.9.
Cooling system	As described in Article 8.4.4.10.

Table 8.4.4.7.-E
S4a, S4b Systems – 100% Outdoor Air without Local Ventilation for Heating
Forming Part of Sentences 8.4.4.7.(4) and 8.4.4.18.(3)

Description	System conveying 100% outdoor air to the *temperature-control zone*.
Outdoor airflow	Constant, as described in Article 8.4.4.18.
Primary system supply air temperature	Identical to that of the proposed *building*.
Primary system supply fan (100% outdoor air)	Operates continually when the system is operating.
	S4a – If the supply fan supplies only that *temperature-control zone*, the supply fan must provide a static pressure of 150 Pa and have a combined energy efficiency (fan-motor-drive) of at least 20%, without return fan.
	S4b – If the supply fan supplies several *temperature-control zones*, the supply fan must provide a static pressure of 325 Pa and have a combined energy efficiency of at least 40%, without return fan.
	Possibility of adjusting the static pressure as described in Sentence 8.4.4.18.(4).
Outdoor air	Constant outdoor air supply corresponding to the outdoor airflow required in the NBC to maintain acceptable indoor air quality in the *temperature-control zone*.
Operating schedule	As described in Article 8.4.3.2.
Heating system	As described in Article 8.4.4.9.
Cooling system	As described in Article 8.4.4.10.

”.

8.4.4.8. Strike out the Article.

8.4.4.9. Replace the Article by the following:

“**8.4.4.9. Heating System**

1) Where the proposed *building's secondary system* has no heating capacity, the reference *building's* corresponding *secondary system* shall have no heating capacity.

2) Where, in the proposed *building*, the *secondary system* is heated using a hydronic loop, the reference *building's* corresponding heating system shall be modeled using a hydronic loop on the following conditions:

a) the heating *primary system* shall be

i) a single-stage *boiler*, where the heating capacity is not more than 176 kW,

ii) a two-stage *boiler*, the lowest stage operating first at 50%, where the heat capacity is more than 176 kW but not more than 352 kW, or

iii) a modulating *boiler* between 25% and 100% of its capacity, where the heating capacity is more than 352 kW,

b) the pumping system shall be modeled by a variable-flow pump on a single primary water loop, and that pump shall

i) ride its performance curve, or

ii) be variable-speed when the pumping system is referred to in Clause 5.2.6.1.(1)(a),

c) the peak pumping flow rate shall be sized using the following parameters:

i) the heating capacity of the *boiler*,

ii) a heat transfer fluid supply temperature of 82°C, and

iii) a heat transfer fluid return temperature of 54°C (see Note A-8.4.4.9.(2)(c), 8.4.4.10.(2)(d) and 8.4.4.11.(4)(b)), and

d) the peak pumping power demand shall be identical to the sum of the peak pumping power demands used for the proposed *building* heating loop (see Note A-8.4.4.9.(2)(d), 8.4.4.10.(2)(e) and 8.4.4.11.(4)(c)).

3) Where the heating system of the proposed *building's secondary system* is a *furnace*, the reference *building's* corresponding heating system shall be a *furnace* and it shall be modeled as follows:

a) where the heating capacity is not more than 66 kW, the *furnace* shall be modeled as a two-stage heating device of equal capacity, and

b) where the heating capacity is more than 66 kW, the *furnace* shall be modeled as a device whose number of heating stages is equal to its capacity divided by 66 kW, then rounded to the next whole number.

4) Where the heating system of the proposed *building's secondary system* is an electric resistance, the reference *building's* corresponding heating system shall be an electric resistance having a constant efficiency of 100% independently of load.".

8.4.4.10.

Replace the Article by the following:

"**8.4.4.10. Air Cooling**

1) Where the proposed *building's secondary system* has no cooling capacity, the reference *building's secondary system* shall have no cooling capacity.

2) Where the cooling system of the proposed *building's primary system* or *secondary system* is hydronic, the cooling system of the reference *building's primary system* or *secondary system* shall be hydronic and shall be modeled according to the following conditions:

a) the number and type of chillers shall be determined using Table 8.4.4.10.,

b) a single primary chilled water loop shall be modeled with as many pumps as there are chillers defined in Clause (a),

c) the pumping system shall be modeled with variable flow, and its pumps shall

i) ride their performance curve, or

ii) be variable-speed where the pumping system is referred to in Clause 5.2.6.1.(1)(a),

d) the peak pumping flow shall be sized using the following parameters:

i) the total cooling capacity of the reference *building's* system,

ii) a heat transfer fluid supply temperature of 7°C, and

iii) a heat transfer fluid return temperature of 13°C (see Note A-8.4.4.9.(2)(c), 8.4.4.10.(2)(d) and 8.4.4.11.(4)(b)), and

e) the peak pumping power demand shall be identical to the sum of the peak pumping power demands used for the proposed *building's* cooling loop (see Note A-8.4.4.9.(2)(d), 8.4.4.10.(2)(e) and 8.4.4.11.(4)(c)).

Table 8.4.4.10.
Number and Type of Chillers
Forming Part of Sentence 8.4.4.10.(2)

Total Cooling Capacity	Number	Type
≤ 352 kW	1	Reciprocating, water-cooled

> 352 kW and ≤ 1055 kW	1	Scroll, water-cooled
> 1055 kW and ≤ 2110 kW	2, of equal cooling capacity	Scroll, water cooled
> 2110 kW	2 or more, of equal cooling capacity; the cooling capacity of each chiller shall be not more than 2813 kW	Centrifugal, water-cooled

3) Where the cooling system of the proposed *building's secondary system* is a direct-expansion system, the reference *building's* cooling system shall be a direct-expansion system and that system shall be modeled as follows:

a) where the cooling capacity of the system is not more than 66 kW, the system shall be modeled as a two-stage system of equal capacity, and

b) where the cooling capacity is more than 66 kW, the system shall be modeled as a system whose number of stages is equal to its capacity divided by 66 kW, then rounded to the next whole number.".

8.4.4.11.

Strike out "Where applicable," in Sentence (1);

Replace Sentences (4) to (6) by the following:

"**4)** The cooling tower pumping system shall be modeled

a) as a constant-speed system,

b) with a flow rate sized using the following parameters:

i) the cooling tower's capacity,

ii) a rise of the heat transfer fluid temperature of 6°C (see Note A-8.4.4.9.(2)(c), 8.4.4.10.(2)(d) and 8.4.4.11.(4)(b)), and

c) with a peak pumping power demand identical to the sum of the peak pumping power demands used for the proposed building loop (see Note A-8.4.4.9.(2)(d), 8.4.4.10.(2)(e) and 8.4.4.11.(4)(c)).

5) The fan of each cooling tower cell shall be modeled as a constant-speed axial fan

a) with a stop-start control that maintains the tower outlet water temperature at 29°C, and

b) whose motor has a rated capacity equal to 1.5% of the cell cooling capacity, in kW.".

8.4.4.12.

Strike out the Article.

8.4.4.13.

Strike out the Article.

8.4.4.14.

Replace the Article by the following:

"**8.4.4.14. Pumps**

1) Except as provided in Sentences 8.4.4.9.(2), 8.4.4.10.(2), 8.4.4.11.(4) and 8.4.4.20.(4), pumps shall be modeled in the reference *building* so that, for each pump, the ratio between the peak power demand and the peak pumping flow is identical to that of the proposed *building's* corresponding pump.

2) Where the pumping system is a variable-flow system, the pumps referred to in Sentence (1) shall be modeled in accordance with Table 8.4.4.21.-H as

a) pumps that ride their performance curve, or

	b) pumps with variable speed drive, where the pumping system is referred to in Clause 5.2.6.1.(1)(a).”.
8.4.4.15.	Replace Sentence (2) by the following: “**2)** Where the outdoor air ventilation rate of a *temperature-control zone* is diminished in accordance with Sentence 8.4.3.6.(2), the outdoor air ventilation rate of the reference *building's* corresponding zone shall be the minimum flow required under the NBC to maintain acceptable indoor air quality in the *temperature-control zone*.”.
8.4.4.16.	Strike out the Article.
8.4.4.17.	Replace the Article by the following: “**8.4.4.17. Fans** **1)** Where the *HVAC system* of a *thermal block* of the proposed *building* includes a fan that exhausts air directly to the outside and that is covered by either of Sentences 5.2.3.1.(3) or 5.2.10.1.(3), its flow rate, power demand, operating schedule and part-load performance shall be modeled identically in the reference *building*. **2)** Constant-volume fans shall be modeled as airfoils without inlet vanes riding their performance curves, in accordance with Table 8.4.4.21.-I. **3)** Variable-volume fans shall be modeled as forward curves with inlet vanes, in accordance with Table 8.4.4.21.-I. **4)** The fanless powered boxes of a variable-flow *HVAC system* shall be modeled taking into consideration a minimum flow as being the greater of a) 30% of the peak flow of the *temperature-control zone*, and b) the outdoor airflow required by the NBC to maintain acceptable indoor air quality in the *temperature-control zone*. **5)** The powered boxes with fan of a variable-flow *HVAC system* shall be modeled as having a) a minimum flow equal to the outdoor airflow required by the NBC to maintain acceptable indoor air quality in the *temperature-control zone*, and b) a parallel fan i) whose maximum flow is set at 50% of the peak flow of the *temperature-control zone*, and ii) whose ratio between the peak power demand and the flow is identical to that of the proposed *building's* fan. **6)** Return or relief fans shall be modeled with a peak flow as being the greater of a) the supply fan peak flow less the outdoor airflow rate, and b) 90% of the supply fan peak flow.”.
8.4.4.18.	Replace the Article by the following: “**8.4.4.18. Ventilation** **1)** The supply airflow rate provided by *secondary systems* shall be modeled as being equal to the sum of the airflow rates supplied to each *temperature-control zones* calculated in accordance with Sentences (2) and (3). **2)** The supply airflow rate to a *temperature-control zone* shall be modeled as being the greatest of

	a) the airflow rate for heating, based on the peak heating load and a temperature difference of 21°C, b) the airflow rate for cooling, based on the peak cooling load and a temperature difference of 11°C, and c) the outdoor air ventilation rate supplied to the *temperature-control zone*, in accordance with Article 8.4.4.15. **3)** Where the static pressure of an *HVAC system* fan of the proposed *building* is adjusted under Sentence 8.4.3.6.(4), the static pressure of the reference *building's* corresponding fan is permitted to be adjusted using the following equation: $$P_{Ref\,adjusted} = P_{Ref} + 0.87 \cdot \sum_{i=1}^{n} \frac{SPA_i \cdot D_{i,Prop}}{D_{vi,Prop}}$$ where $P_{Ref\,adjusted}$ = adjusted pressure of the fan in the reference *building*, in Pa, P_{Ref} = pressure of the fan in the reference *building* as established in Tables 8.4.4.7.-B to 8.4.4.7.-E, in Pa, SPA_i = static pressure adjustment due to the ith equipment as established in Table 5.2.3.1., in Pa, n = number of equipment requiring static pressure adjustment, $D_{i,Prop}$ = flow through the ith equipment of the proposed *building* requiring static pressure adjustment, in L/s, and $D_{vi,Prop}$ = design flow rate of fan serving the ith equipment of the proposed *building*, in L/s.".
8.4.4.19.	Replace the Article by the following: "**8.4.4.19. Heat Recovery** **1)** Where the *HVAC system* must be equipped with heat or energy recovery equipment under Sentence 5.2.10.1.(1), that equipment shall be modeled to the following conditions: a) the static pressures of fans shall be adjusted according to the equation in Sentence 8.4.4.18.(3), and b) the heat recovery efficiency shall be i) 60%, or ii) 65% for *dwelling units* located in a municipality whose number of heating degree-days under 18°C is 6000 or more. **2)** Where the proposed *building* has refrigeration systems referred to in Article 5.2.10.3., the reference *building's* refrigeration system shall be modeled to the following conditions: a) the operating and performance characteristics, capacity, part-load performance and pumping flows shall be identical to those of the proposed *building's* refrigeration system, b) peak load and demand schedules shall be identical to those of the proposed *building*; c) the heat recovery equipment shall have i) the capacity to reject recovered heat to the hydronic systems for heating, and ii) the same means to reject unrecovered heat as that of the proposed *building*, and d) the efficiency of the heat recovery equipment shall be the smaller of the following values: i) 25% of the recovery efficiency, and

	ii) 80% of the space heating capacity and *service water* heating capacity. (See Note A-8.4.4.19.(2).) **3)** Where the proposed *building* has a pool referred to in Sentence 5.2.10.2.(1), the dehumidification equipment referred to in Sentence 5.2.10.2.(3) serving that *temperature-control zone* shall be modeled in the reference *building* as an electric air-cooled chiller a) sized for the peak dehumidification load, b) to the conditions described in Sentence 8.4.4.10.(2), c) having a *COP* varying according to the load, and d) equipped with a heat recovery unit compliant with Sentence 5.2.10.2.(2).”.
8.4.4.20.	Replace the Article by the following: “**8.4.4.20. Service Water Heating System** **1)** The reference *building's service water* heating system shall be modeled as being identical to that of the proposed *building* as regards the following characteristics: a) storage capacity, and b) power input. **2)** Where the proposed *building's service water* heating system includes a storage tank, the *service water* setpoint temperature of the reference *building's* storage tank shall be identical to that of the proposed *building*. **3)** Where the proposed *building's service water* heating system comprises multiple water heaters, the reference *building's service water* heating system shall be modeled with the same number of water heaters. **4)** Where the proposed *building's service water* heating system is a recirculation system, the reference *building's* circulation pumps shall be modeled as pumps with a) constant speed operation, and b) a flow rate identical to that of the proposed *building's* circulation pumps.”.
8.4.4.21.	Replace Sentence (1) by the following: “**1)** In the absence of equivalent functionalities of programs modeling the part-load operation of HVAC equipment or *service water* heating systems, the part-load performance curves for the same reference *building's* equipment shall be calculated in accordance with Tables 8.4.4.21.-A to 8.4.4.21.-I, as applicable. (See Note A-8.4.4.21.(1).)”; Replace “Forming Part of Sentences 8.4.4.9.(8) and 8.4.4.21.(1)” under the heading of Table 8.4.4.21.-A by the following: “Forming Part of Sentences 8.4.3.6.(3), 8.4.4.6.(5) and 8.4.4.21.(1)”; Replace “Forming Part of Sentence 8.4.4.21.(1)” under the heading of Table 8.4.4.21.-B by the following: “Forming Part of Sentences 8.4.3.6.(3), 8.4.4.6.(5) and 8.4.4.21.(1)”; Replace the words “Forming Part of Sentences 8.4.4.10.(5) and 8.4.4.21.(1)” wherever they appear under the headings of Tables 8.4.4.21.-C, 8.4.4.21.-D and 8.4.4.21.-F by the following: “Forming Part of Sentences 8.4.3.6.(3), 8.4.4.6.(5) and 8.4.4.21.(1)”;

Replace “Forming Part of Sentences 8.4.4.10.(5), 8.4.4.13.(2) and 8.4.4.21.(1)” under the heading of Table 8.4.4.21.-E by the following:

“Forming Part of Sentences 8.4.3.6.(3), 8.4.4.6.(5) and 8.4.4.21.(1)”;

Replace “Forming Part of Sentences 8.4.4.20.(5) and 8.4.4.21.(1)” under the heading of Table 8.4.4.21.-G by the following:

“Forming Part of Sentences 8.4.3.6.(3), 8.4.4.6.(5) and 8.4.4.21.(1)”;

Add the following after Table 8.4.4.21.-G:

“**Table 8.4.4.21.-H**
Part-load Pump Characteristics
Forming Part of Sentences 8.4.3.6.(3), 8.4.4.6.(5), 8.4.4.14.(2) and 8.4.4.21.(1)

Pump Part-load Capacity Curve	The curve or group of curves describes the pump part-load capacity. Pump capacity $P_{partload}$ shall be calculated using one of the following equations: If $V_{partload}/V_{rated} < d$, then $= P_{rated} \cdot e$ If $V_{partload}/V_{rated} \geq d$, then $P_{partload} = P_{rated} \cdot (a + b \cdot (V_{partload}/V_{rated}) + c \cdot (V_{partload}/V_{rated})^2)$ where $V_{partload}$ = flow rate at part-load conditions, in L/s, V_{rated} = flow rate at rated conditions, in L/s, $P_{partload}$ = power draw at part-load conditions, in kW, P_{rated} = power draw at rated conditions, in kW, and a, b, c, d, e = coefficients defined in the following Table:

Type of Pump	Power Coefficients				
	a	b	c	d	e
Pump riding its curve	0.227143	1.178929	–0.41071	0.47	0.68
Pump with variable speed drive	0.00153028	0.00520806	1.0086242	0.2	0.04

Table 8.4.4.21.-I
Part-load Fan Characteristics
Forming Part of Sentences 8.4.3.6.(3), 8.4.4.6.(5), 8.4.4.17.(2) and (3) and 8.4.4.21.(1)

Power Curve/Part-load Fan Flow	The curve or group of curves describes the power ratio/part-load fan flow ratio. The fan power ratio (P)/flow ratio (F) shall be calculated using one of the following equations: If $P < d$, then $F = e$ If $P \geq d$, then $F = a + b \cdot P + c \cdot P^2$ where P = output/rated F = outlet flow/rated flow a, b, c, d, e = coefficients defined in the following Table:

Type of Fan	Coefficients				
	a	b	c	d	e
Airfoil without inlet vane riding its performance curve	0.227143	1.178929	–0.41071	0.47	0.68
Backward inclined fan without inlet vane riding its performance curve					
Airfoil with inlet vanes	0.584345	–0.57917	0.970238	0.35	0.50
Backward inclined fan with inlet vanes					
Forward curved fan with inlet vanes	0.339619	–0.84814	1.495671	0.25	0.22

	Variable speed drive	0.00153028	0.00520806	1.0086242	0.20	0.04

”.

Add the following Article:

“**8.4.4.22. Energy Recovered on Site and Renewable Energy Produced on Site**

1) Except as provided in Sentence (2), where the proposed *building* uses energy recovered on site or renewable energy produced on site to serve an *HVAC system* or a *service water* heating system, the corresponding *HVAC system* or *service water* heating system modeled in the reference *building* shall

a) be the same type as the proposed *building's* system,

b) use the same primary supply energy source as the system used in the proposed *building*, and

c) be sized to fully meet the load.

2) Where no supply energy source is used in the proposed *building*, the reference *building* shall consist of

a) an electric resistance sized for the peak heating load, where the energy recovered on site or the renewable energy produced on site is used for heating purposes, or

b) an electric air-cooled chiller sized for the peak cooling load, where the energy recovered on site or the renewable energy produced on site is used for cooling purposes.

3) Where the energy recovered on site or the renewable energy produced on site is electricity, that electricity shall not be accounted for in modeling the reference *building*.”.

8.5.1.1.

Replace respectively the headings of the Articles concerned below by the following in Table 8.5.1.1.:

“**8.4.2.9. Manually Operated Shading Devices**”;

“**8.4.2.10. HVAC Systems**”;

“**8.4.3.2. Operating Schedules**”;

“**8.4.3.6. HVAC Systems**”;

“**8.4.3.7. Temperature-control Zones**”;

“**8.4.3.8. Internal and Service Water Heating Loads**”;

“**8.4.3.9. Energy Recovered on Site and Renewable Energy Produced on Site**”;

“**8.4.4.6. HVAC Systems and Service Water Heating Systems**”;

“**8.4.4.10. Air Cooling**”;

“**8.4.4.18. Ventilation**”;

“**8.4.4.20. Service Water Heating System**”;

Replace respectively, in numerical order, the headings, objectives and functional statements of the Articles concerned below by the following in Table 8.5.1.1:

“**8.4.4.3. Building Envelope Components**

(1) [F99-OE1.1]

(2) [F99-OE1.1]

(3) [F99-OE1.1]

	(5) [F99-OE1.1]"; "**8.4.4.19. Heat-Recovery System** (1) [F99,F100-OE1.1] (2) [F99,F100-OE1.1] (3) (a), (b), (c) [F99,F100-OE1.1] (d) [F100-OE1.1]"; Insert respectively, in numerical order, the following objectives and functional statements in Table 8.5.1.1.: "**8.4.3.3. Building Envelope Components** (4) [F99-OE1.1] (5) [F99-OE1.1] (7) [F99-OE1.1] (8) [F99-OE1.1]"; "**8.4.3.6. HVAC Systems** (3) [F99-OE1.1] (4) [F99-OE1.1] (5) [F99-OE1.1]"; "**8.4.4.1. General** (8) [F99-OE1.1] (9) [F99-OE1.1]"; "**8.4.4.6. HVAC Systems and Service Water Heating Systems** (5) [F99-OE1.1] (6) [F99-OE1.1] (7) [F99-OE1.1] (9) [F99-OE1.1]"; "**8.4.4.7. HVAC System Selection** (3) [F99-OE1.1]"; "**8.4.4.17. Fans** (6) [F99-OE1.1]"; Add the following Article, objectives and functional statements at the end of Table 8.5.1.1.: "**8.4.4.22. Energy Recovered on Site and Renewable Energy Produced on Site** (1) [F99-OE1.1] (2) [F99-OE1.1] (3) [F99-OE1.1]"; Strike out respectively, in numerical order, the following objectives and functional statements in Table 8.5.1.1.: "**8.4.1.2. Determination of Compliance** (5) [F99-OE1.1]"; "**8.4.2.2. Calculation Methods** (1) [F99-OE1.1]

	(2) [F99-OE1.1]”;
	“**8.4.2.8. Building Envelope**
	(6) [F99-OE1.1]
	(7) [F99-OE1.1]
	(8) [F99-OE1.1]
	(9) [F99-OE1.1]
	(10) [F99-OE1.1]”;
	“**8.4.3.1. General**
	(3) [F99-OE1.1]
	(4) [F99-OE1.1]
	(5) [F99-OE1.1]
	(7) [F99-OE1.1]
	(8) [F99-OE1.1]”;
	“**8.4.3.2. Operating Schedules, Internal Loads, Service Water Heating Loads and Set-point Temperature**
	(2) [F99-OE1.1]
	(3) [F99-OE1.1]”;
	“**8.4.3.8. Internal and Service Water Heating Loads**
	(2) [F99-OE1.1]”;
	“**8.4.4.5. Lighting**
	(4) [F99-OE1.1]
	(5) [F99-OE1.1]
	(6) [F99-OE1.1]
	(7) [F99-OE1.1]
	(8) [F99-OE1.1]
	(9) [F99-OE1.1]
	(10) [F99-OE1.1]
	(11) [F99-OE1.1]
	(12) [F99-OE1.1]”;
	“**8.4.4.9. Heating System**
	(5) [F99-OE1.1]
	(6) [F99-OE1.1]
	(7) [F99-OE1.1]
	(8) [F99-OE1.1]”;
	“**8.4.4.10. Air Cooling**
	(4) [F99-OE1.1]
	(5) [F99-OE1.1]
	(6) [F99-OE1.1]
	(7) [F99-OE1.1]
	(8) [F99-OE1.1]
	(9) [F99,F100-OE1.1]”;
	“**8.4.4.11. Cooling Towers**
	(6) [F99-OE1.1]”;

	"**8.4.4.14. Hydronic Pumps** (3) [F99-OE1.1] (4) [F99-OE1.1] (5) [F99-OE1.1] (6) [F99-OE1.1]"; "**8.4.4.18. Ventilation** (3) [F99-OE1.1] (4) [F99-OE1.1] (5) [F99-OE1.1] (6) [F99-OE1.1]"; "**8.4.4.20. Service Water Heating** (5) [F99-OE1.1] (6) [F99-OE1.1] (7) [F99-OE1.1] (8) [F99-OE1.1] (9) [F99-OE1.1]"; --- Strike out the following Articles, objectives and functional statements in Table 8.5.1.1.: "**8.4.2.4. Thermal Mass** (1) [F99-OE1.1]"; "**8.4.2.5. Space Temperature** (1) [F99-OE1.1]"; "**8.4.2.7. Internal and Service Water Heating Loads** (1) [F99-OE1.1] (2) [F99-OE1.1] (3) [F99-OE1.1] (4) [F99-OE1.1] (5) [F99-OE1.1]"; "**8.4.3.9. Ice Plants** (1) [F99-OE1.1]"; "**8.4.4.2. Operating Schedules, Internal Loads, Service Water Heating Loads and Set-point Temperature** (1) [F99-OE1.1] (2) [F99-OE1.1] (3) [F99-OE1.1]"; "**8.4.4.4. Thermal Mass** (2) [F99-OE1.1]"; "**8.4.4.8. Equipment Oversizing** (1) [F99-OE1.1] (2) [F99-OE1.1]"; "**8.4.4.12. Cooling with Outside Air** (1) [F99-OE1.1]";

	"**8.4.4.13. Heat Pumps** (1) [F99-OE1.1] (2) [F99-OE1.1]"; "**8.4.4.16. Space Temperature Control** (1) [F99-OE1.1] (2) [F99-OE1.1]".
Division B Part 8 Schedule A	
	Add the following Notes: "**A-8.1.1.2. Application.** The provisions of Sentence 8.1.1.2.(2) make compulsory compliance of electrical or mechanical systems with the relevant prescriptive requirements of Sections 4.2., 5.2., 6.2. and 7.2., and any other applicable provision in Section 8.4. where they are not defined in the plans and specifications. That means that, if at the time of assessment of compliance with the Code using this Part, the information on the systems is insufficient or incomplete, the prescriptive requirements must be applied. For the purposes of enegy simulations, the system concerned of the reference building will have to be identical to that of the proposed building. Thus, the energy performance compliance path allows to consider only the energy performance of systems and components defined in the plans and specifications. Because the envelope has a very significant impact on energy consumption, the thermal and geometric characteristics of the envelope are essential to assess compliance of the building. **A-8.4.1. Compliance.** The energy performance compliance path offers designers an alternative to the prescriptive requirements and trade-offs in Parts 3 to 7 of the Code. Those prescriptive requirements and trade-offs constitute compliance demonstration means relatively simple to apply, but offer less flexibility to designers who wish to design projects meeting the regulatory objectives without necessarily applying all the prescriptive requirements of the Code. For example, the energy performance compliance path allows the increase of the fenestration area of an immovable above the prescribed limit. In return, the designer may choose a heat recovery unit with an efficiency greater than the minimum prescribed requirements that will make up for energy efficiency losses caused by the increase of the fenestration area. The objective is that the annual energy consumption of the proposed *building* is lower or equal to the building energy target of the reference *building*, determined according to the energy performance compliance path provided for in this Part. Contrary to the prescriptive requirements and trade-offs, the energy performance compliance path allows accounting the cross effects and interdependence of solutions implemented in the proposed *building*. For example, the importance of thermal gains of indoor lighting systems will have an impact on the sizing of the HVAC systems and their subsequent energy consumption. Similarly, the efficiency of a heating system will influence the choice of a designer to insulate more the *building envelope* in order to reach the building energy target. **A-8.4.1.2.(3) and (4) Determination of Compliance.** The sizing of the HVAC systems of a building have a significant impact on energy consumption. It may be justified, depending on circumstances, to oversize or undersize the HVAC systems of a project. To achieve equivalence in the comparison, the same sizing rules must apply to the reference *building* and the proposed *building*.

	To prevent unjustified transfer of “energy credits” caused by an abusive undersizing of the HVAC systems of the proposed building, the HVAC systems of the proposed and reference *buildings* must meet the same thermal comfort needs of the spaces served. To that end, the Code does not permit considering a proposed *building* whose thermal discomfort hours exceed those of the reference *building* or considering that the proposed and reference *buildings* have more than 300 h of heat discomfort in a simulated year. To remedy a situation in which discomfort hours exceed the prescribed limits, the adjustment, depending on circumstances, of the supply flow rates and the sizing of coils is suggested to minimize heat transitions, such as start-up in the morning.”.
A-8.4.1.4.	Strike out the Note.
A-8.4.1.4.(2)(b)	Replace the Note by the following: “**A-8.4.1.4.(2)(b) Existing Equipment Characteristics.** Where the HVAC systems of the existing building serve the addition, the existing systems are modeled as they are, i.e. in accordance with the original plans and specifications, in accordance with the applicable regulatory requirements at the time of their installation or from on-site readings.”.
	Add the following Notes: “**A-8.4.1.4.(3) Addition.** The party wall of the existing *building* will be modeled without heat gain or loss, unless the temperature difference between both sides of the wall is greater than 10°C, in which case heat exchanges between the addition and the existing building will be considered in the modeling. **A-8.4.2. Compliance Calculation.** The annual energy consumption is evaluated by an energy modeling software, also called energy simulation software. The software includes at least one program, also called calculation motor. The software often includes graphic interfaces facilitating data entry and result analysis. **A-8.4.2.2.(1) Major Program Deficiencies and Limitations.** The addenda of ANSI/ASHRAE 140, “Standard Method of Test for the Evaluation of Building Energy Analysis Computer Programs,” make it possible to verify whether a program has major deficiencies or limitations.”.
A-8.4.2.2.(1)(g)	Strike out the Note.
	Add the following Note: “**A-8.4.2.2.(3) Internal Loads.** Normal internal loads include loads due to lighting, the presence of occupants, equipment directly used by occupants such as personal computers, automatic equipment such as computer servers, and other loads that do not consume energy such as food that must be kept in a freezer. Internal loads normally produce heat gains in the form of sensible heat, latent heat or radiant heat. Except for lighting, internal loads are not covered by the prescriptive paths of the Code. However, internal loads add cooling and/or heating loads to the building’s HVAC systems and service water heating systems. For that reason, internal loads representative of the building type or space function must be included in the compliance calculations. It will make it possible to correctly evaluate part-load performance of the HVAC systems and service water heating systems, and, by extension, the energy consumption of the proposed and reference buildings.

	Sentence 8.4.4.1.(4) provides that the internal loads must be modeled identically in the proposed and reference building energy models; only the energy consumed by the equipment and systems regulated by the Code can be modeled differently in the proposed and reference buildings. Tables A-8.4.3.8.(1)-A and A-8.4.3.8.(1)-B provide default values that are generally representative of the internal loads based on building or space type. It must be evaluated whether expected internal loads are correctly represented by the default values. Generally, if the default values provided in Note A-8.4.3.8.(1) appear too small compared to the expected internal loads, some commercial and/or industrial operations and/or processes will not be correctly represented. The following loads, often associated to processes and/or activities, are examples of loads that are not represented in the default values in Tables A-8.4.3.8.(1)-A and A-8.4.3.8.(1)-B: • manufacturing machinery in an industrial building, • medical imaging equipment in a hospital, • computer servers in a data centre of an office building, • swimming pool water heating in a recreation centre, • cooking appliances and refrigeration equipment in a commercial kitchen or restaurant. HVAC systems of processes and/or activities that require temperatures, airflows or a humidity rate that do not correspond to the usual comfort conditions are excluded from the prescriptive path; there is no requirement for their operation or efficiency. In the performance path, HVAC systems must be modeled because they have an impact on the cooling or humidification heating load of zones adjacent to the process.”.
A-8.4.2.7.(1)	Strike out the Note.
	Add the following Notes: “**A-8.4.2.8. Modeling of Building Envelope Assemblies.** The programs generally permit modeling opaque building assemblies by a sucession of materials in continuous layers. For example, a metal-frame wall construction could be modeled with three layers of materials representing the exterior cladding, the insulation and the interior finish. In order for the material assembly to have the value of the derated effective thermal resistance calculated in accordance with Sentence 8.4.2.8.(4), the thickness of the insulating layer will generally be adjusted by the program for each opaque building assembly of the proposed building having a different derated effective thermal resistance. Similarly, the thickness of the insulating layer will be adjusted by the program in the reference building to reach the value of the derated effective thermal resistance calculated from the values of the effective thermal resistance, the linear thermal transmittance and the point thermal transmittance required in Part 3. **A-8.4.2.8.(4) Calculation of Effective Thermal Resistance.** Sentence 8.4.2.8.(4) indicates that the effective thermal resistance of opaque building assemblies must be derated in accordance with Sentences 3.3.1.3.(2) and (3) to consider supplementary heat losses caused by partial or complete penetrations of the envelope and by transitions between constructive systems of the envelope. Thus, the effective thermal resistance will be derated in the proposed building according to the proposed construction details. It will also be derated in the reference building by using the default values defined in Sentence 3.3.1.3.(3). Even if the proposed building has a penetration or an intersection that complies with the prescriptive requirements, the derating of the thermal resistance must be carried out

	in the proposed building as well as the reference building since that adjustment will have a different impact on the annual energy consumption of each of the buildings. **A-8.4.2.8.(5) Derated Effective Thermal Resistance According to Temperature-control Zones.** In order to facilitate modeling, the derated effective thermal resistance may be considered for each opaque building assembly, independently of the adjacent temperature-control zones, where they are maintained at a pressure differential of not more than 10°C. For example, in an apartment building, if several sections of walls have been simplified to be considered as only one wall and that wall is in contact with eight temperature-control zones representing eight dwelling units, then the effective thermal resistance may be derated globally for that wall. Thus, a single value of the derated thermal resistance is entered in the energy modeling for the eight zones. That single value of the effective thermal resistance for that wall considers all the partial or complete penetrations of the envelope and the transitions between the different constructive systems of the envelope. However, in the case of a mixed-use building including a grocery store on the first floor having six temperature-control zones maintained at 21°C and two grocery storage zones maintained at 4°C, the effective thermal resistance is derated separately for the section of wall in contact with the first six zones and for the section of wall in contact with the other two zones. **A-8.4.2.10.(3) Part-load Parameters.** The part-load of an HVAC system may vary in particular due to a change in climate conditions or in the fluid inlet temperature in the system. **A-8.4.2.10.(4) Independent Modeling of HVAC Equipment Components.** Generally, the modeling of an HVAC system in a program requires to enter the individual efficiency rates of some components of the systems, such as supply fans, cooling compressors and condensers. However, energy or efficiency indexes of some HVAC equipment such as the EER (energy-efficiency ratio), may include, for example, the efficiency rate of a supply fan. The energy efficiency rate of the component must be isolated from the EER of the equipment and entered in the program. Consequently, the equipment efficiency, measured, for example, by the EER, must be adjusted to reflect the separate processing of the components before entering that value in the program. It is possible to calculate the adjusted EER or to obtain it by contacting the equipment manufacturer.”.
A-8.4.3.2.(1)	Replace the first Sentence of the Note by the following: “Operating schedules generally account for the following elements: • the presence of occupants, • the operation of interior lighting, • the operation of receptacle equipment, • the operation of HVAC systems, • the operation of service water systems. Tables A-8.4.3.2.(1)-A to A-8.4.3.2.(1)-K provide for default operating schedules that are generally representative of the type of building or space. Those schedules may be used with Table A-8.4.3.8.(1)-A or A-8.4.3.8.(1)-B if more accurate information is not available. The proposed operating schedules must be evaluated to determine if they are correctly represented by the defaut values.”; Replace the word “Lighting” wherever it appears in Tables A-8.4.3.2.(1)-A to A-8.4.3.2.(1)-K by “Interior lighting”.

A-8.4.3.2.(2)	Strike out the Note.
A-8.4.3.3.(2)	Replace the Note by the following: "**A-8.4.3.3.(2) Energy Modeling of the Proposed Building Considering the Fenestration Shading Effects.** Where the modeler considers the effect of shading on fenestration, the existing surrounding elements that have an impact on the building must be considered in the modeling. For example, the potential energy gain due to the sun breaker system is partly cancelled where a neighbouring immovable or structure casts its shadow on the proposed building. The 10% reduction of sun gain and visible sun transmittance coefficients of the fenestration considers the darkening due to dirt and dust present on the fenestration.".
A-8.4.3.3.(3)	Strike out the Note.
	Add the following Notes: "**A-8.4.3.3.(3)(a) Solar Heat Gain and Visible Sun Transmittance Coefficients of Fenestration.** The 20% reduction of solar heat gain and visible sun transmittance coefficients of the fenestration is explained by the darkening effect set at 10% due to dirt and dust on the fenestration and by the darkening effect set at 10% due to surrounding elements, the building itself and the permanent automated shading devices. Those adjusted coefficients allow the modeler to not model the shading in the program as provided in Sentence 8.4.3.3.(2). **A-8.4.3.3.(4) Air Leakage Rate of the Building Envelope.** The air leakage rate of 0.25 L/(s·m²), which is a typical infiltration rate at 5 Pa, is used in the energy consumption model and may not reflect the real value encountered under operating conditions. That rate is based on pressure differentials typically encountered under operating conditions. **A-8.4.3.3.(7) Modeling of Building Assemblies in Contact with the Ground.** The detailed calculation of the annual heat transfer of building assemblies in contact with the ground is complex and may require a significant investment of time. Indeed, the heat transfer with the ground varies in particular based on the geometry of the building, the depth of the foundations, the climate zone, and the arrangement of the materials composing the opaque building assemblies in contact with the ground. In addition, thermal conductivity of the ground, the most important parameter for quantifying the heat transfer with the ground, varies significantly based on several factors such as ground humidity rate, type of ground, ground temperature and ground density. The effect of frost, snow cover and depth of the groundwater may also have an influence on heat transfer. The calculation of heat transfer of the building assemblies in contact with the ground is treated in different manners in programs. Some programs implement detailed calculation methods while others use simplified methods to estimate the annual heat transfer of opaque building assemblies in contact with the ground. The purpose of Sentence 8.4.3.3.(7) is to prohibit performance exchanges with building assemblies in contact with the ground where simplified methods for calculating heat transfer with the ground are used by the program. Although simplified methods generally allow the definition of the properties of the insulation under the slab and those at the foundation wall level, those methods are not sufficiently accurate to quantify heat transfer with the ground. Such simplified methods are described in the "ASHRAE Handbook – Fundamentals 2013," Chapter 18. Another example of a simplified method, defined from regression analyses and used in some programs, takes into

	account factors representing heat transfer through the floor and walls (factors F and C). For performance exchanges of building assemblies in contact with the ground to be considered in the performance path, Sentence 8.4.3.3.(7) requires that the program be capable to accurately represent the arrangement of the insulation and the properties of the building assemblies in contact with the ground such as dimensions, specific heat, density and thermal conductivity. Before considering modeling performance exchanges of building assemblies in contact with the ground, compliance of the calculation method used with Sentence 8.4.3.3.(7) must be verified. If it does not, as specified in Article 3.4.1.2., the prescriptive requirements of Subsection 3.2.3. apply to building assemblies in contact with the ground of the proposed building. In accordance with Clause 8.4.4.1.(4)(i), those assemblies will be modeled in the same manner as the reference building. **A-8.4.3.4.(2) Occupancy Control Factors.** As provided in Sentence 4.4.1.2.(2), the interior lighting controls in Subsection 4.2.2. are mandatory and cannot be exchanged. That means that the controls must be present in the plans and specifications and must be modeled in the same manner for both the proposed and reference buildings. It concerns in particular controls in Table 4.2.1.6., listed in the columns under “Type of Lighting Control”. Contrary to the occupancy control factors, personal control factors and photocontrol factors may reduce the power of the installed lighting power of the proposed building but will not reduce the interior lighting power of the reference building.”.
A-8.4.3.4.(4)	Replace “See Table A-8.4.3.2.(2)-B” by “See Tables A-8.4.3.8.(1)-A and A-8.4.3.8.(1)-B”.
A-8.4.3.5.	Replace “source external to the scope of the proposed building assessment” by “source outside the site”.
A-8.4.3.6.(1)	Replace the Note by the following: “**A-8.4.3.6.(1) Outdoor Air Ventilation Rates and Exhaust Rates.** The effectiveness of demand control ventilation varies significantly according to occupant density and sensor type, placement and calibration. The increase or reduction of outdoor air ventilation and exhaust rates are not means to comply with the energy performance compliance path.”.
	Add the following Notes: “**A-8.4.3.6.(2) Displacement Ventilation.** Displacement ventilation is a type of diffusion that requires little energy. Where a temperature-control zone meets the criteria set out in Clauses 8.4.3.6.(2)(a) and (2)(b), the distribution airflow may be reduced by dividing it by 1.2. In accordance with Sentence 8.4.4.15.(2), the distribution airflow of the corresponding reference building zone will not be reduced. **A-8.4.3.6.(3) Part-load Equipment Operation.** HVAC equipment rarely operates at full load. Consequently, the part-load efficiency must be adequately modeled. The designer must use available part-load performance curves of the proposed equipment, generally provided by the manufacturer, and must adapt those curves to the requirements of the programs. That adaptation is necessary since to model part-load equipment operation, each program includes its own mathematical models, generally in the form of a polynomial equation.

Where the program does not have the function of modeling the part-load operation of HVAC equipment (for example, due to an atypical curve), Tables 8.4.4.21-A to 8.4.4.21-I or the default curves of the programs may be used.

A-8.4.3.7.(3) Temperature-control Zone Delimitation. Where the temperature-control zones and HVAC systems are not entirely stated in the plans, modeling of those zones in accordance with the requirements of Sentence 8.4.3.7.(3) is necessary. Those requirements must be applied, for example, in the case of a commercial building whose layout of rental suites is unknown at the time of modeling.

A-8.4.3.8.(1) Internal and Service Water Heating Loads and Illuminance Levels. Tables A-8.4.3.8.(1)-A and A-8.4.3.8.(1)-B contain default values for internal and service water heating loads and their operating schedules for simulations purposes.

Table A-8.4.3.8.(1)-A
Modeling Guidance for Loads, Operating Schedules and Illuminance Levels by Building Type

Building Type	Occupant Density, m²/occupant	Peak Receptacle Load, W/m²	Service Water Heating Load, W/occupant	Operating Schedule from Note A-8.4.3.2.(1)	Illuminance Levels, lx[1]
Automotive facility	20	5	90	E	400
Convention centre	8	2.5	30	C	300
Courthouse	15	5	60	A	400
Dining					
bar lounge/leisure	10	1	115	B	125
cafeteria/fast food	10	1	115	B	300
family	10	1	115	B	300
Dormitory	30	2.5	500	G	100
Exercise centre	10	1	90	B	350
Fire station	25	2.5	400	F	400
Gymnasium	10	1	90	B	500
Health care clinic	20	7.5	90	A	600
Hospital	20	7.5	90	H	350
Hotel/Motel	25	2.5	500	F	150
Library	20	2.5	90	C	500
Long-term care					
dwelling units	25	1.5	500	J	400
other	25	1.5	500	B	400
Manufacturing facility	30	10	90	A	450
Motion picture theatre	8	1	30	C	150
Multi-unit residential building	25	5	500	G	125
Museum	20	2.5	60	C	100
Office	25	7.5	90	A	400
Penitentiary	30	2.5	400	H	250
Performing arts theatre	8	1	30	C	250
Police station	25	7.5	90	H	400
Post office	25	7.5	90	A	400
Religious building	5	1	15	I	250
Retail area	30	2.5	40	C	450
School/University	8	5	60	D	400
Sports arena	10	1	90	B	400
Storage garage	1000	0	0	K	75
Town hall	25	7.5	90	D	400
Transportation facility	15	1	65	H	225
Warehouse	1500	1	300	A	150
Workshop	30	10	90	A	500

[1] The values are weighted averages that correspond to typical overall illuminance levels recommended for the buildings types listed and include both general lighting and task lighting. They are based on recommendations published by the IES.

Table A-8.4.3.8.(2)-B
Modeling Guidance for Loads, Operating Schedules and Illuminance Levels by Space Type

Common Space Types					
Space Type	Occupant Density, m²/occupant	Peak Receptacle Load, W/m²	Service Water Heating Load, W/occupant	Operating Schedule[1] from Note A-8.4.3.2.(1)	Illuminance Levels (lx)[2]
Atrium (any height)	10	2.5	0	*	250
Audience seating area – permanent for auditorium	5	2.5	30	C	100

for convention centre	5	2.5	30	C	350
for gymnasium	5	0	30	B	350
for motion picture theatre	5	2.5	30	C	250
for penitentiary	5	2.5	30	C	250
for performing arts theatre	7.5	2.5	30	C	250
for religious building	5	1	15	I	150
for sports arena	5	0	30	B	150
other	5	1	15	*	100
Banking activity area	25	5	60	A	400
Classroom/Lecture hall/Training room	7.5	5	65	D	400
Conference/Meeting/Multi-purpose room	5	1	45	C	350
Confinement cell	25	0	325	G	400
Copy/Print room	100	60	90	A	400
Corridor/Transition area	100	0	0	*	150
Courtroom	5	2.5	30	A	400
Dining area					
for bar lounge/leisure dining	10	1	90	B	100
for cafeteria/fast food dining	10	1	120	B	200
for family dining	10	1	120	B	200
for penitentiary	10	1	120	B	200
for space designed to ANSI/IES RP-28 “Lighting and the Visual Environment for Senior Living,” and used primarily by residents	10	1	120	B	200
other	10	1	120	B	200
Dressing room for performing arts theatre	30	2.5	40	C	250
Electrical/Mechanical room	200	1	0	*	350
Emergency vehicle garage	25	2.5	325	H	350
Food preparation area	20	10	120	B	500
Guest room	25	2.5	600	F	200
Laboratory					
for classrooms	20	10	180	D	500
other	20	10	180	A	650
Laundry/Washing area	20	0	60	C	350
Loading dock – interior	500	0	0	H	200
Lobby					
for elevator	10	1	0	C	200
for hotel	10	2.5	30	H	250
for motion picture theatre	10	1	0	C	150
for performing arts theatre	10	1	0	C	200
for space designed to ANSI/IES RP-28, “Lighting and the Visual Environment for Senior Living,” and used primarily by residents	10	2.5	30	B	150
other	10	1	0	C	150
Locker room	10	2.5	0	*	100
Lounge/Break room					
for health care facility	10	1	60	B	150
other	10	1	60	B	150
Office	20	7.5	90	A	400
Pharmacy area	20	2.5	45	C	400
Sales area	30	2.5	40	C	500
Seating area - general	10	0	65	*	150
Server room	100	200	90	* or H[3]	350
Stairway/Stairwell	200	0	0	*	150
Storage garage – interior	1000	0	0	K	75
Storage room					
≥ 5 m²	100	1	300	*	100
< 5 m²	100	0	0	*	100
Vehicle maintenance area	20	5	90	E	500
Washroom					
for space designed to ANSI/IES RP-28, “Lighting and the Visual Environment for Senior Living,” and used primarily by residents	30	1	0	*	150
other	30	1	0	*	150
Workshop	30	10	90	A	500
Building-Specific Space Types					
Convention centre – exhibit space	10	2.5	30	C	500
Dormitory – living quarters	25	2.5	500	G	125
Dwelling unit					
general	25	5	500	G	125
long-term	25	2.5	500	J	300

Fire station – living quarters	25	2.5	500	G	150
Gymnasium/Fitness centre					
exercise area	5	1	90	B	350
playing area	5	1.5	90	B	350
Health care facility					
exam/treatment room	20	10	90	C	600
imaging room	20	10	90	H	225
medical supply room	20	1	0	H	400
nursery	20	10	90	H	400
nurses' station	20	2.5	45	H	400
operating room	20	10	300	H	1000
patient room	20	10	90	H	400
physical therapy room	20	10	45	C	350
recovery room	20	10	180	H	250
Library					
reading area	20	1	90	C	500
stacks	20	0	90	C	500
Manufacturing facility					
detailed manufacturing area	30	10	90	A	600
equipment room	30	10	90	A	250
extra high bay area (> 15 m floor-to-ceiling height)	30	10	90	A	400
high bay area (7.5 m to 15 m floor-to-ceiling height)	30	10	90	A	400
low bay area (< 7.5 m floor-to-ceiling height)	30	10	90	A	250
Museum					
general exhibition area	5	2.5	60	C	250
restoration room	20	5	50	A	600
Post office – sorting area	20	7.5	90	A	400
Religious building					
fellowship hall	5	1	45	C	250
worship/pulpit/choir area	5	1	15	I	250
Retail facility					
dressing/fitting room	30	2.5	40	C	350
mall concourse	20	1	30	C	400
Space designed to ANSI/IES RP-28, "Lighting and the Visual Environment for Senior Living"					
chapel used primarily by residents	10	1	15	I	150
recreation room used primarily by residents	20	1	60	B	150
Sports arena– playing area					
playing area with facilities for more than 5000 spectators	5	1.5	90	B	1600
playing area with facilities for more than 2000 spectators but not more than 5000 spectators	5	1.5	90	B	1000
playing area with facilities for more than 200 spectators but not more than 2000 spectators	5	1.5	90	B	800
playing area with facilities for less than 200 spectators or without a facility for spectators	5	1.5	90	B	500
Transportation facility					
airport concourse	20	0	65	H	150
baggage/carousel area	20	2.5	65	H	250
terminal ticket counter	10	2.5	65	H	250
Warehouse – storage area					
medium to bulky palletized items	100	1	65	A	200
small hand-carried items(4)	50	1	65	A	300

(1) An asterisk (*) in this column indicates that there is no recommended default schedule for the space type listed. In general, such space types will be simulated using a schedule that is similar to the adjacent spaces served: e.g. a corridor space serving an adjacent office space will be simulated using a schedule that is similar to that of the office space.

(2) The values are weighted averages that correspond to typical overall illuminance levels recommended for the buildings/space types listed and include both general lighting and task lighting. They are based on recommendations published by the IES.

	(3) A server room that serves a single building or a limited group of users would tend to have operating schedules matching those of that group or building. Server rooms that serve as data centres operating independently of the building in which they are located would tend to operate continuously. (4) See Note A-4.2.1.6.”.
A-8.4.3.9.	Strike out the Note.
	Add the following Notes: “**A-8.4.3.9.(1) and (2) Energy Recovered on Site and Renewable Energy Produced on Site.** Sentence 8.4.3.9.(1) applies, for example, in the case of heat recovery from an exothermic process. Where heat recovery technology is provided for in Subsection 5.2.10., the highest performance of the heat recovery equipment planned in the proposed building is not permitted to be considered. In such a case, since that equipment must be modeled in the reference building under Article 8.4.4.19., the highest performance of that equipment in the proposed building will be considered by the program. Sentence 8.4.3.9.(2) applies, for example, for the production of electricity by a photovoltaic panel. **A-8.4.4.1.(2) Prescriptive Compliance.** The basic principle guiding the modeling of the reference building is that every component, device or system included in the building must comply with the applicable prescriptive requirements of Sections 3.2., 4.2., 5.2., 6.2. and 7.2. The requirements of Subsection 8.4.4. clarify the specific treatment of parameters some of which are not covered by the prescriptive requirements of the Code. **A-8.4.4.1.(4) Building Characteristics.** The characteristics in Sentence 8.4.4.1.(4) are two-fold. Some characteristics of the building do not have specific prescriptive requirements but have considerable influence on energy consumption: the shape of the building, its orientation, receptacle loads, heat from a process, the consumption of an HVAC system dedicated only to a process, etc. The modeler cannot take into account those characteristics to improve the performance of the proposed building; they must be modeled identically in the proposed and reference buildings. Other building characteristics, for example, the airtightness rate, have specific prescriptive requirements but their compliance is difficult to verify in the building once built. That is why the modeler is not permitted to use those characteristics to improve the performance of the proposed building. They must also be modeled identically in the proposed and the reference buildings. Some indications to the contrary may be provided for in Subsections 8.4.3. and 8.4.4., in particular • for Clause (4)(i), Sentence 8.4.4.3.(5) (see Note A-8.4.3.3.(7)), • for Clause (4)(j), Sentence 8.4.4.4.(1), and • for Clause (4)(x), Sentences 8.4.4.3.(2) and (3). **A-8.4.4.1.(8) and (9) Equipment Energy Efficiency for Modeling the Reference Building.** The Energy Efficiency Act (S.C. 1992, c. 36) and its regulations fall under federal jurisdiction. The Act respecting energy efficiency and energy conservation standards for certain electrical or hydrocarbon-fuelled appliances (chapter N-1.01) and its regulations fall under Québec’s jurisdiction. They provide minimum levels for some types of equipment. Where a minimum energy efficiency level for equipment is provided for in Québec legislation, Sentences 8.4.4.1.(8) and (9) provide for the use of that value for modeling the reference building.

	Where no minimum level is provided in Québec legislation, the energy efficiency of the equipment must be identical to that of the corresponding equipment in the proposed building, i.e. that provided for in federal legislation.”.
A-8.4.4.2.(3)	Strike out the Note.
	Add the following Note: “**A-8.4.4.3.(4) Energy Modeling of the Reference Building Considering Fenestration Shading Effects.** Where the modeler takes into consideration fenestration shading effects in the proposed building, the permanent and automated shading devices are not modeled in the reference building. However, as provided in Clause 8.4.4.1.(4)(h), shading effects due to surrounding elements and to the building itself must be modeled in the same manner as the proposed building. As provided in Sentence 8.4.2.9.(1), manually-operated interior shading devices, such as blinds, must not be modeled in neither the proposed building nor the reference building.”.
A-8.4.4.3.(8)	Strike out the Note.
A-8.4.4.4.(1)	Replace the Note by the following: “**A-8.4.4.4.(1) Thermal Mass.** Sentence 8.4.4.4.(1) allows the modeling of the thermal mass of the reference building by specifying the thermal characteristics of a lightweight assembly rather than considering a thermal mass identical to that of the proposed building. Where the reference building is modeled with a thermal mass different from that of the proposed building, the parameters determining thermal inertia of the elements of the reference building envelope, such as specific heat and the density of a constructive layer, must be adjusted in accordance with that Sentence to reflect a lightweight construction having an overall weight of 55 kg/m² and a heat capacity of 50 kJ/(m²·°C).”.
A-8.4.4.5.(3)	Strike out the Note.
A-8.4.4.5.(6)	Strike out the Note.
A-8.4.4.5.(7)	Strike out the Note.
A-8.4.4.5.(10)(b)	Strike out the Note.
A-8.4.4.5.(11)	Strike out the Note.
	Add the following Notes: “**A-8.4.4.6.(2) and (3) Types of Heat Pumps.** The following types of heat pumps are the most commonly used:

	Water-loop heat pump: a heat pump connected to an internal water loop used as a heat source and/or sink. The loop may include an auxiliary heat source (e.g. a boiler) and/or heat rejection device (e.g. a cooling tower). Water-source heat pump: a heat pump using as a heat source and/or sink • surface water (e.g. river, pond or lake), • groundwater, • a water loop directly carrying waste heat generated outside the building, or • a water loop indirectly carrying waste heat generated outside the building using a heat exchanger that separates the heat source and/or sink from an internal water loop. Ground-source heat pump: a heat pump using the ground as a heat source and/or sink through the use of a ground-heat exchanger in which circulates either a refrigerant supplied by the heat pump or a heat transfer fluid coming from an internal water loop. Air-source heat pump: a heat pump using the outside air as a heat source and/or sink. **A-8.4.4.6.(4) Automatic Sizing of HVAC equipment.** It is possible that, so as not to exceed the annual maximum number of discomfort hours provided for in Sentences 8.4.1.2.(3) and (4), the program requires oversizing or undersizing of the HVAC equipment for modeling purposes. If the HVAC systems of the proposed building are oversized or undersized in respect of the plans and specifications, the corresponding systems of the reference building must be similarly oversized or undersized. The Note “Equipment sizing (11.5.2.(i) and 11.5.2.(j))” in ASHRAE/IES 90.1, “User’s Manual,” proposes a procedure to facilitate the adjustment of sizing that could be required by the program. **A-8.4.4.7.(2) and (3) Modeling of Air Distribution and Hydronic Loop Systems.** The requirements of Sentences 8.4.4.7.(2) and (3) do not aim to represent accurately the number of fans and individual pumps of a project but rather seek to match the distribution principles used for a temperature-control zone of the proposed building to those of the reference building corresponding zone.”.
A-8.4.4.8.	Strike out the Note.
	Add the following Notes: “**A-8.4.4.9.(2)(c), 8.4.4.10.(2)(d) and 8.4.4.11.(4)(b) Pumping Flow.** Where the pumping flow rate, PFR, in L/min, is not calculated by the program, it may be evaluated using the following equation: $$\mathrm{PFR} = \frac{\mathrm{P} \cdot 60\,000}{\mathrm{Cp} \cdot \rho \cdot \Delta\mathrm{T}}$$ where P = power of the heating or cooling equipment, in kW, Cp = specific heat of the heat transfer fluid, in kJ/(kg·°C), ΔT = difference between the supply and return temperature of the heat transfer fluid, in °C, and ρ = density fo the heat transfer fluid, in kg/m³. The specific heat and the density vary based on the temperature and composition of the heat transfer fluid. Consequently, those two values will be different whether it

	is a hot or cool water loop, and will also vary based on the percentage of glycol in the heat transfer fluid. To take into account that reality, those values may be evaluated by considering the average temperature of the liquid circulating in the loop. For example, for a hot water loop with a supply at 82°C and a return at 54°C, the average will be 68°C. Water at a temperature of 68°C has a density of 978.87 kg/m³ and a specific heat of 4.19 kJ/(kg·°C). **A-8.4.4.9.(2)(d), 8.4.4.10.(2)(e) and 8.4.4.11.(4)(c) Pumping Power Demand.** Where the pumping power demand, PPD, in W, is not defined by the program, it may be established using the following equation: $$\mathrm{PPD} = \frac{\mathrm{PFR} \cdot \mathrm{H} \cdot \rho \cdot \mathrm{g}}{60\,000 \cdot \eta}$$ where PFR = pumping flow rate, in L/min (see Note A-8.4.4.9.(2)(c), 8.4.4.10.(2)(d) and 8.4.4.11.(4)(b)), H = loss of pressure in the system, in m of pressure head, ρ = density of the liquid, in kg/m³, g = gravitational constant of 9.81 m/s², and η = combined efficiency turbine-motor-variable speed drive of pump. The reference building pump must have a power demand equivalent to the sum of the power demands of each hydronic loop pump of the proposed building.”.
A-8.4.4.13.	Strike out the Note.
A-8.4.4.13.(1)	Strike out the Note.
A-8.4.4.14.(2)	Strike out the Note.
A-8.4.4.17.(1)	Strike out the Note.
A-8.4.4.17.(2)	Strike out the Note.
	Add the following Note: “**A-8.4.4.19.(2) Heat Recovery from Ice-making Machines.** A water-cooled, double-bundle water chiller having a load profile corresponding to the load planned on the ice-making machine is adequate for the purposes of Part 8 and allows the modeling of heat recovery. The following documents may be helpful in setting a more detailed model using refrigeration equipment rather than a water chiller and modeling the ice sheet itself and its interaction with adjacent components and spaces: • Zmeureanu, R., E.M. Zelaya and D. Giguère. (2002). Simulation de la consommation d'énergie d'un aréna à l'aide du logiciel DOE-2.IE. ESim 2002 Conference, Montréal. • Ouzzane, M. et al. Cooling Load and Environmental Measurements in a Canadian Indoor Ice Rink. ASHRAE Transactions, Vol. 112, Pt. 2, Paper no. QC-06-008, pp. 538-545, 2006.

	• Sunyé, R. et al. ASHRAE Research Report 1289, Develop and Verify Methods For Determining Ice Sheet Cooling Loads, 2007. • Teyssedou, G., R. Zmeureanu, and D. Giguère. (2009). Thermal Response of the Concrete Slab of an Indoor Ice Rink. ASHRAE HVAC&R Research, Vol. 15, No. 3, May 2009. Since ice-making for rinks and curling rinks is often associated with resurfacing activities, which require a significant amount of heated service water, the energy models of the proposed and reference buildings should account for the load in accordance with Clause 8.4.4.1.(4)(b).”.
A-8.4.4.20.(4)(a)	Strike out the Note.
A-8.4.4.20.(6)	Strike out the Note.
A-8.4.4.20.(7)	Strike out the Note.
	Add the following Note: “**A-8.4.4.21.(1) Fan Part-Load Curves.** Figure A-8.4.4.21.(1) illustrates the equations of Table 8.4.4.21.-I as a graph. 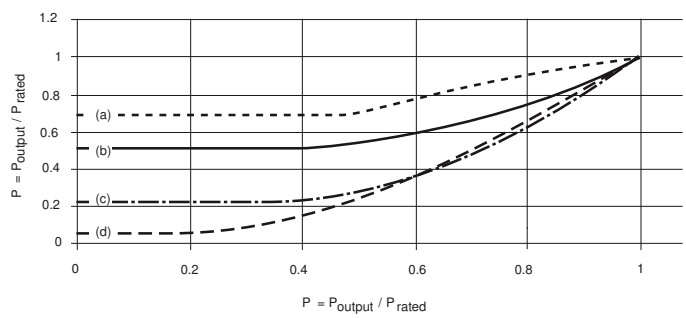 (a) air foil or backward inclined riding fan curve without inlet vanes following its performance curve (b) air foil or backward inclined with inlet vanes (c) forward curved with inlet vanes (d) variable speed drive **Figure A-8.4.4.21.(1)** **Fan part-load curves**”.
Division B Climatic Data	
Table C-1	Strike out the Note to Table C-1; Strike out the column “Degree-Days Below 15°C” in Table C.

Division C Part 1	
1.1.1.1.	Replace “, aux installations techniques et aux systems” in Sentence (1) of the French text by “et aux installations techniques”.
Division C Part 2	
2.1.1.1.	Replace “, aux installations techniques et aux systems” in Sentence (1) of the French text by “et aux installations techniques”.
2.2.1.1.	Strike out the Article.
2.2.2.1.	Replace Sentences (1) and (2) by the following: “**1)** The information available for verification purposes shall be provided to show that the proposed work will conform to this Code and indicate the compliance paths that were used. (See Note A-1.1.2.1. of Division B). **2)** Plans shall be drawn to scale and shall indicate the nature and extent of the work and proposed function in sufficient detail to establish that, when completed, the work and the proposed function will conform to this Code.”.
2.2.2.2.	Replace “inspection” in Sentence (1) by “verification”. Add the following Sentence: “**2)** The documentation provided for verification purposes shall contain the climatic data applicable to the location of the *building*, in accordance with Table C-1 of Division B.”.
2.2.2.3.	Replace the portion before Clause (1)(a) in Sentence (1) by the following: “**1)** The following documentation on the *building envelope* shall be provided for verification purposes.”; Replace Clauses (1)(b) and (1)(c) by the following: “b) total *fenestration* and door area excluding *skylights*, c) total automatic sliding door, revolving door and fire shutter area,”; Replace Clauses (1)(h) to (1)(m) by the following: “h) ratio of total f*enestration* and door area excluding *skylights* to gross wall area, i) the *effective thermal resistance* of building assemblies other than *fenestration* and doors, and the calculation method used to determine the *effective thermal resistance*, j) *overall thermal transmittance* of i) *fenestration,*

	ii) doors with or without glazing forming part of the *building envelope*, and iii) access hatches, k) description and location of *air barrier assemblies* in *opaque building assemblies*, l) details on the reduction of thermal bridging required in Article 3.2.1.2., m) where Sentence 3.2.1.3.(1) of Division B applies, the indoor design temperature, and n) where Sentence 3.2.1.3.(2) of Division B applies, the heating setpoint in winter months."; Add the following Sentence: "**2)** Where Section 3.3. of Division B is applied, calculation details shall be provided for verification purposes and shall contain the information necessary to ensure compliance with the requirements of that Section.".
2.2.2.4.	Replace the portion before Clause (1)(a) in Sentence (1) by the following: "**1)** The following documentation on the lighting systems shall be provided for verification purposes:"; Strike out Clause (1)(b); Replace Clauses (1)(c) to (1)(e) by the following: "c) method used to determine the total *interior lighting power allowance* in each space assembly, d) where the *building* area method is used, for each space assembly, i) the *floor area*, in m², ii) the density of the *interior lighting power allowance*, in W/m², iii) the total *interior lighting power allowance*, in kW, and iv) the total *installed interior lighting power*, in kW, e) where the space-by-space method is used, for each space assembly, i) the *floor area*, in m², of each space, ii) the density of the *interior lighting power allowance*, in W/m², of each space, iii) the total *interior lighting power allowance*, in kW, and iv) the total *installed interior lighting power*, in kW,"; Strike out Clause (1)(f); Strike out "and justification for spaces exempted" in Clause (1)(g); Replace Clauses (1)(h) and (1)(i) by the following: "h) adjustment and additional *interior lighting* power used, i) list of functions, spaces and/or equipment that are not included in the calculation of the *installed interior lighting power* and their controls, j) lighting zone used to determine *exterior lighting* power allowances, k) list of installed photocontrols and controlled indoor spaces, l) for each exterior application,

	i) the *exterior lighting* power allowance, in kW, and ii) the installed *exterior lighting* power, in kW, and m) installed exterior automatic controls."; Add the following Sentence: "**2)** Where Section 4.3. of Division B is applied, calculation details shall be provided for verification purposes and shall contain the information necessary to ensure compliance with the requirements of that Section.".
2.2.2.5.	Replace Sentence (1) by the following: "**1)** The following documentation on the *HVAC systems* shall be provided for verification purposes: a) a description of each system, detailing its function, design details, performance characteristics and distribution arrangement, b) schematic and control diagrams and sequences of operation, c) start/stop and adjustment procedures, d) proposed temperature control devices in the spaces, e) details on heat recovery equipment, if applicable, f) details on ice-making machines, if applicable, g) details on food refrigeration equipment, if applicable, h) details on commercial cooking equipment, if applicable, i) temperature setpoints of the spaces, j) thermal resistance of the installed duct and *plenum* insulation and that of piping insulation, and k) limits of *temperature-control zones*, if applicable.".
2.2.2.6.	Replace the Article by the following: "**2.2.2.6. Documentation on Service Water Heating Systems** **1)** The following documentation on the *service water* heating shall be provided for verification purposes: a) a description of each system detailing its function, design details, performance characteristics and distribution arrangement, b) schematic and control diagrams and sequences of operation, c) start/stop and adjustment procedures, and d) thermal resistance of piping insulation.".
2.2.2.7.	Replace the Article by the following: "**2.2.2.7. Information on Transformers and Electric Motors** **1)** Information on the performance characteristics of the transformers and electric motors in Part 7 shall be provided for verification purposes.".
2.2.2.8.	Strike out Sentence (2); Replace Clauses (3)(c) to (3)(e) by the following: "c) the lighting systems data summary section of the report shall contain the documentation required in Article 2.2.2.4. for both the proposed *building* and the

	reference *building* and, if daylight calculations are made, the calculation method and the results, d) the HVAC data summary section of the report shall contain the documentation required in Article 2.2.2.5. for the proposed *building* and the reference *building*, e) the *service water* heating data summary section of the report shall contain the documentation required in Article 2.2.2.6. for the proposed *building* and the reference *building*,"; Replace Sentence (4) by the following: "**4)** The climatic data and the modeling file of the proposed *building* and the reference *building* containing inputs for the programs shall be provided for verification purposes."; Strike out "exclusive of verification of the limitations contained in Parts 3 to 7 of Division B" at the end of Sentence (5); Replace Sentence (6) by the following: "**6)** The report shall indicate that the analysis was performed in accordance with Part 8 of Division B of the NECB."; Add the following Sentences at the end of the Article: "**10)** The report shall provide an explanation for each program error message. **11)** The report shall specify any portion of energy that reduces the *annual energy consumption* of the proposed *building*, as a reduction due to renewable energy produced on site and/or a reduction due to energy recovered on site. **12)** The report shall indicate the program(s) used.".
2.3.1.	Replace the Subsection by the following: "**2.3.1. Approval of Alternative Solutions** **2.3.1.1. Conditions for Approval** **1)** The proposed alternative solutions shall be approved by the Board on the conditions it sets pursuant to section 127 of the Building Act (chapter B-1.1).".
Division C Schedule A Part 2	Strike out the Notes.

DIVISION III
OFFENCE

1.1.6. Any contravention of one of the provisions of this Chapter constitutes an offence.".

DIVISION II
TRANSITIONAL AND FINAL

2. This Regulation replaces the Regulation respecting energy conservation in new buildings (chapter E-1.1, r. 1) with respect to construction work referred to in sections 1.1.2 and 1.1.3 of the Construction Code (chapter B-1.1, r. 2), made by section 1 of this Regulation.

Despite the foregoing, the provisions of the Regulation respecting energy conservation in new buildings may apply to construction work referred to in the first paragraph provided that the work begins before (*insert the date that occurs eighteen months after the date of coming into force of this Regulation*).

3. This Regulation comes into force on (*insert the date corresponding to the forty-fifth day following the date of publication of this Regulation in the Gazette officielle du Québec*).

104018

Draft Regulation

Building Act
(chapter B-1.1)

Safety Code
— Amendment

Notice is hereby given, in accordance with sections 10 and 11 of the Regulations Act (chapter R-18.1), that the Regulation amending the Regulation to amend the Safety Code, appearing below, may be made by the Government with or without amendment on the expiry of 45 days following this publication.

The purpose of this draft Regulation is to extend the coming into force date for the requirements to have sprinklers installed in certain private seniors' residences, set out in the Regulation to amend the Safety Code approved by Order in Council 1035-2015 dated 18 November 2015, from 2 December 2020 to 2 December 2022. This later deadline will afford owners of the residences additional time to complete their sprinkler installations.

Study of the matter has shown that the draft Regulation will have no impact on enterprises, including small and medium-sized businesses.

Further information on the draft Regulation may be obtained by contacting Suzel Bourdeau, engineer, Direction du bâtiment et des installations techniques, Régie du bâtiment du Québec, 545, boulevard Crémazie Est, 7e étage, Montréal (Québec) H2M 2V2; telephone: 514 873-3716; fax: 514 873-1939; email: suzel.bourdeau@rbq.gouv.qc.ca.

Any person wishing to comment on the draft Regulation is requested to submit written comments within the 45-day period to Mélanie Drainville, Secretary General and Director of Institutional Affairs, Régie du bâtiment du Québec, 800, place D'Youville, 16e étage, Québec (Québec) G1R 5S3; email: projet.reglement.commentaires@rbq.gouv.qc.ca.

ANDRÉE LAFOREST,
Minister of Municipal Affairs and Housing

Regulation amending the Regulation to amend the Safety Code

Building Act
(chapter B-1.1, ss. 175 and 178)

1. The Regulation to amend the Safety Code, approved by Order in Council 1035-2015 dated 18 November 2015, is amended by replacing "2 December 2020" in the last paragraph of note B-2.1.3.6. of Appendix 1 introduced by section 6 by "2 December 2022".

2. Section 7 is amended by replacing "5 years" by "7 years".

3. This Regulation comes into force on the fifteenth day following its publication in the *Gazette officielle du Québec*.

104017

Draft Regulation

Highway Safety Code
(chapter C-24.2)

Use of tires specifically designed for winter driving
— Amendment

Notice is hereby given, in accordance with sections 10 and 11 of the Regulations Act (chapter R-18.1), that the Regulation to amend the Regulation respecting the use of tires specifically designed for winter driving, appearing below, may be made by the Government on the expiry of 45 days following this publication.

The purpose of the draft Regulation is to make consequential amendments to the Regulation respecting the use of tires specifically designed for winter driving (chapter C-24.2, r. 45) to ensure consistency with the amendments made to section 440.1 of the Highway Safety Code (chapter C-24.2) under section 115 of the Act to amend the Highway Safety Code and other provisions (2018, chapter 7).

Accordingly, except for heavy vehicles, tool vehicles and farm machines, the date on which tires designed for winter driving must equip every motorized road vehicle to which the draft Regulation applies would be moved forward from 15 December to 1 December.

To date, study of the matter shows that the amendments brought by the draft Regulation will have no financial impact on enterprises.

Further information on the draft Regulation may be obtained by contacting Lise Fournier, Direction générale de la sécurité et du camionnage, Ministère des Transports, 700, boulevard René-Lévesque Est, 16e étage, Québec (Québec) G1R 5H1; telephone: 418 643-7090, extension 22406; email: lise.fournier@transports.gouv.qc.ca.

Any person wishing to comment on the draft Regulation is requested to submit written comments within the 45-day period to the Minister of Transport, 700, boulevard René-Lévesque Est, 29e étage, Québec (Québec) G1R 5H1.

FRANÇOIS BONNARDEL,
Minister of Transport

Regulation to amend the Regulation respecting the use of tires specifically designed for winter driving

Highway Safety Code
(chapter C-24.2, s. 440.1)

An Act to amend the Highway Safety Code and other provisions
(2018, chapter 7, s. 115)

1. The Regulation respecting the use of tires specifically designed for winter driving (chapter C-24.2, r. 45) is amended by replacing section 1 by the following:

"**1.** From 1 December to 15 March, all the tires equipping a motorized road vehicle registered in Québec, except a heavy vehicle, tool vehicle or farm machine, must be specifically designed for winter driving. That requirement also applies to any person renting out such a vehicle in Québec regardless of the place of registration.".

2. Section 2 is amended

(1) by replacing "a taxi or passenger vehicle" in paragraph 1 by "the vehicle";

(2) by replacing paragraph 3 by the following:

"(3) for a period of 7 days following the date on which the vehicle was purchased from a vehicle dealer;";

(3) by replacing "a passenger vehicle or taxi" in paragraph 3.1 by "the vehicle";

(4) by replacing "a passenger vehicle" in paragraphs 4 and 5 by "a vehicle";

(5) by replacing "a passenger vehicle or taxi, as the case may be," in paragraph 7 by "a vehicle".

3. Section 3 is amended

(1) by replacing the words "passenger vehicle" wherever they appear in the first paragraph by the word "vehicle";

(2) by striking out the second paragraph.

4. This Regulation comes into force on 1 December 2019.

104020

Treasury Board

Gouvernement du Québec

O.C. 221070, 25 June 2019

An Act respecting the Government and Public Employees Retirement Plan (chapter R-10)

Regulation respecting the application — Amendment

Regulation to amend the Regulation under the Act respecting the Government and Public Employees Retirement Plan

WHEREAS, under the first paragraph of section 109.2 of the Act respecting the Government and Public Employees Retirement Plan (chapter R-10) and subject to section 109.3, the years and parts of a year of service credited to an employee or a person referred to in section 8.7 or 8.8 of the Act respecting the Pension Plan of Peace Officers in Correctional Services (chapter R-9.2) under the Pension Plan of Peace Officers in Correctional Services, the Teachers Pension Plan or the Civil Service Superannuation Plan and the years and parts of a year of service for which pension credit was granted under that Act, the Act respecting the Teachers Pension Plan (chapter R-11) or the Act respecting the Civil Service Superannuation Plan(chapter R-12) must be credited under this plan on an actuarially equivalent basis established on the date, determined in accordance with that section 8.7 or 8.8, on which the employee's or person's membership in this plan ended, if the contributions have not been refunded;

WHEREAS, under the fourth paragraph of section 109.2 of the Act respecting the Government and Public Employees Retirement Plan, the actuarial values of the benefits are established on the basis of actuarial assumptions and methods that are determined by regulation and which may vary with the pension plans and benefits concerned;

WHEREAS, under the first paragraph of section 109.8 of the Act, the years and parts of a year of service credited to an employee under the pension plan of the Sûreté du Québec (C.T. 181151 dated 18 August 1992) may be credited under the plan on an actuarially equivalent basis;

WHEREAS, under the third paragraph of section 109.8 of the Act, the actuarial values of the benefits are established on the date the transfer application is received at Retraite Québec on the basis of actuarial assumptions and methods determined by regulation;

WHEREAS, under subparagraph 13.2 of the first paragraph of section 134 of the Act, The Government may, by regulation, determine the actuarial assumptions and methods used to establish the actuarial values of the benefits referred to in sections 109.2 and 109.8, which may vary with the pension plans and benefits concerned;

WHEREAS the Government made the Regulation under the Act respecting the Government and Public Employees Retirement Plan by Order in Council 1845-88 dated 14 December 1988;

WHEREAS it is expedient to amend the Regulation;

WHEREAS, under the first paragraph of section 134 of the Act, the Government exercises the regulatory powers provided for therein after Retraite Québec has consulted the pension committee referred to in section 163 of the Act;

WHEREAS, under section 40 of the Public Administration Act (chapter A-6.01), the Conseil du trésor, after consulting the Minister of Finance, exercises the powers conferred on the Government by an Act that establishes a pension plan applicable to personnel of the public and parapublic sectors, except certain powers;

WHEREAS the consultations have been held;

THE CONSEIL DU TRÉSOR DECIDES:

THAT the Regulation to amend the Regulation under the Act respecting the Government and Public Employees Retirement Plan, attached thereto, is hereby made.

LOUIS TREMBLAY,
Le greffier du Conseil du trésor

Regulation to amend the Regulation under the Act respecting the Government and Public Employees Retirement Plan

An Act respecting the Government and Public Employees Retirement Plan (chapter R-10, s. 134, 1st par., subpar. 13.2)

1. The Regulation under the Act respecting the Government and Public Employees Retirement Plan (chapter R-10, r. 2) is amended in section 30.1

(1) by replacing paragraph 9 by the following:

"(9) Rate of increase of salaries

The annual increase in salaries corresponds to the annual increase of the MPE, increased by the annual rate of salary increase.

For the Pension Plan of Peace Officers in Correctional Services

Years of service	Annual rate of increase
0 year	2.50%
1-6 years	4.30%
7 years	2.50%
8-10 years	0.80%
11-20 years	0.60%
21-30 years	0.30%
31 years and over	0%

For the Government and Public Employees Retirement Plan, the Teachers Pension Plan and the Civil Service Superannuation Plan

Years of service	Annual rate of increase
0-2 years	3.30%
3-5 years	3.20%
6-8 years	2.70%
9-11 years	2.40%
12-14 years	1.90%
15-17 years	1.30%
18-19 years	0.90%
20-24 years	0.55%
25-29 years	0.40%
30 years and over	0.35%

For the Pension Plan of the members of the Sûreté du Québec

Years of service	Annual rate of increase
0-1 year	11.80%
2 years	13.20%
3 years	11.50%
4 years	8.90%
5 years	8.60%
6 years	6.00%
7-9 years	0.75%
10 years	1.50%
11-13 years	0.75%
14 years	2.00%
15-20 years	0.50%
21 years	2.00%
22 years or more	0.50%”;

(2) by replacing paragraph 11 by the following:

“(11) Retirement age

For the purposes of section 109.2 of the Act, the retirement age is the age on the date on which membership ceases as determined pursuant to section 8.7 or 8.8 of the Act respecting the Pension Plan of Peace Officers in Correctional Services (chapter R-9.2).

For the purposes of section 109.8 of the Act, retirement is determined according to the following retirement rates:

For the Government and Public Employees Retirement Plan

For an employee who would attain 35 years of service before attaining age 55	– 85% at 35 years of service – 100% (of the remaining 85%) at 40 years of service
For an employee who would attain 35 years of service at age 55 or older but before age 61	– 90% at 35 years of service – 100% (of the remaining 90%) at 40 years of service
For an employee who would attain age 61 and 30 years of service or age 60 and more than 29 years of service without exceeding 34 years of service	– 85% at age 61 and 30 years of service or age 60 and more than 29 years of service without exceeding 34 years of service – 100% (of the remaining 85%) at 35 years of service
For an employee who would attain age 61 and more than 15 years of service without exceeding 29 years of service	– 70% at age 61 and more than 15 years of service without exceeding 29 years of service – 100% (of the remaining 70%) at age 65
For an employee who would attain age 61 without having more than 15 years of service	– 60% at age 61 without having more than 15 years of service – 100% (of the remaining 60%) at age 65

For an employee who has at least 35 years of service at the time of transfer	– 80% 6 months after the transfer – 100% (of the remaining 80%) at 40 years of service or age 65 if the employee attains that age without attaining 40 years of service
For an employee who is at least 61 years old or at least 60 years old and who has 30 years of service without exceeding 34 years of service at the time of transfer	– 60% 6 months after the transfer – 100% (of the remaining 60%) at 35 years of service or age 65 if the employee attains that age without attaining 35 years of service

For the Pension Plan of the members of the Sûreté du Québec

For an employee who would attain 25 years of service or more but before age 55 or whose age and years of service would add up to 75 (criteria 75) before age 50	– 15% at 25 years of service or criteria 75 if the employee is less than 50 years of age – 100% (of the remaining 15%) at 32 years of service
For an employee who would attain 25 years of service at age 55 or older but before age 60	– 30% at 25 years of service – 100% (of the remaining 30%) at 32 years of service or age 60 if the employee attains that age without attaining 32 years of service
For an employee who would attain age 60 without having more than 25 years of service	– 60% at age 60 – 100% (of the remaining 60%) at age 65
For an employee who is at least 60 years of age at the time of transfer	– 60% 6 months after the transfer – 100% (of the remaining 60%) at 38 years of service or age 65 if the employee attains that age without attaining 38 years of service
For an employee who has at least 32 years of service without having reached age 60 at the time of transfer	– 60% 6 months after the transfer – 100% (of the remaining 60%) at 38 years of service or age 60 if the employee attains that age without attaining 38 years of service
For an employee whose age and years of service add up to 75 while the employee is less than 50 years of age and has less than 32 years of service at the time of transfer	– 30% 6 months after the transfer – 100% (of the remaining 30%) at 32 years of service
For an employee who has at least 25 years of service but less than 32 years of service and is 50 to 54 years of age at the time of transfer	– 30% 6 months after the transfer – 100% (of the remaining 30%) at 32 years of service
For an employee who has at least 25 years of service but less than 32 years of service and is 55 to 59 years of age at the time of transfer	– 50% 6 months after the transfer – 100% (of the remaining 50%) at 32 years of service or age 60 if the employee attains that age without attaining 32 years of service”.

2. This Regulation comes into force on 1 July 2019.

104010

Gouvernement du Québec

O.C. 221071, 25 June 2019

An Act respecting the Pension Plan of Management Personnel (chapter R-12.1)

Regulation respecting the application — Amendment

Regulation to amend the Regulation under the Act respecting the Pension Plan of Management Personnel

WHEREAS, under the first paragraph of section 138.1 of the Act respecting the Pension Plan of Management Personnel (chapter R-12.1) and subject to section 138.2, the years and parts of a year of service credited under the Pension Plan of Peace Officers in Correctional Services to an employee or a person referred to in section 8.7 of the Act respecting the Pension Plan of Peace Officers in Correctional Services (chapter R-9.2) and the years and parts of a year of service for which pension credit is granted under that Act must be credited under this plan on an actuarially equivalent basis established on the date, determined under that section 8.7, on which the employee's or person's membership in this plan ended, if the contributions have not been refunded;

WHEREAS, under the third paragraph of section 138.1 of the Act respecting the Pension Plan of Management Personnel, the actuarial values of the benefits are established on the basis of actuarial assumptions and methods that are determined by regulation and which may vary with the pension plans and benefits concerned;

WHEREAS, under the first paragraph of section 138.7 of the Act, the years and parts of a year of service credited to an employee under the pension plan of the Sûreté du Québec (C.T. 181151 dated 18 August 1992) may be credited under this plan on an actuarially equivalent basis. The employee must no longer have been an employee for the purposes of the pension plan of the Sûreté du Québec for at least 210 days and must not have received a refund of contributions or be a pensioner under that plan. However, the time limit does not apply if the employee simultaneously submits an application for benefits and an application for a transfer under this plan;

WHEREAS, under the third paragraph of section 138.7 of the Act, the actuarial values of the benefits are determined on the date the application for transfer is received at Retraite Québec on the basis of actuarial assumptions and methods determined by regulation;

WHEREAS, under subparagraph 12 of the first paragraph of section 196 of the Act, the Government may, by regulation, determine the actuarial assumptions and methods used to establish the actuarial values of the benefits referred to in sections 138.1 and 138.7, which may vary with the pension plans and benefits concerned;

WHEREAS the Conseil du trésor made the Regulation under the Act respecting the Pension Plan of Management Personnel by Decision 202420 dated 24 May 2005;

WHEREAS it is expedient to amend the Regulation;

WHEREAS, under the first paragraph of section 196 of the Act, the Government exercises the regulatory powers provided for therein after Retraite Québec has consulted the pension committee referred to in section 196.2;

WHEREAS, under section 40 of the Public Administration Act (chapter A-6.01), the Conseil du trésor, after consulting the Minister of Finance, exercises the powers conferred on the Government by an Act that establishes a pension plan applicable to personnel of the public and parapublic sectors, except certain powers;

WHEREAS the consultations have been held;

THE CONSEIL DU TRÉSOR DECIDES:

THAT the Regulation to amend the Regulation under the Act respecting the Pension Plan of Management Personnel, attached hereto, is hereby made.

LOUIS TREMBLAY,
Le greffier du Conseil du trésor,

Regulation to amend the Regulation under the Act respecting the Pension Plan of Management Personnel

An Act respecting the Pension Plan of Management Personnel (chapter R-12.1, s. 196, 1st par., subpar. 12)

1. The Regulation under the Act respecting the Pension Plan of Management Personnel (chapter R-12.1, r. 1) is amended in section 10.1

(1) by replacing paragraph 9 by the following:

"(9) Rate of increase of salaries

The annual increase in salaries corresponds to the annual increase of the MPE, increased by the annual rate of salary increase.

For the Pension Plan of Peace Officers in Correctional Services

Years of service	Annual rate of increase
0 year	2.50%
1-6 years	4.30%
7 years	2.50%
8-10 years	0.80%
11-20 years	0.60%
21-30 years	0.30%
31 years and over	0%

For the Pension Plan of Management Personnel

Age	Annual rate of increase
18-36 years	3.30%
37-38 years	3.10%
39-41 years	2.20%
42-44 years	1.70%
45-49 years	1.50%
50-54 years	1.20%
55 years and over	0.90%

For the Pension Plan of the members of the Sûreté du Québec

Years of service	Annual rate of increase
0-1 year	11.80%
2 years	13.20%
3 years	11.50%
4 years	8.90%
5 years	8.60%
6 years	6.00%
7-9 years	0.75%
10 years	1.50%
11-13 years	0.75%
14 years	2.00%
15-20 years	0.50%
21 years	2.00%
22 years or more	0.50%”;

(2) by replacing paragraph 11 by the following:

“(11) Retirement age

For the purposes of section 138.1 of the Act, the retirement age is the age on the date on which membership ceases as determined pursuant to section 8.7 of the Act respecting the Pension Plan of Peace Officers in Correctional Services (chapter R-9.2).

For the purposes of section 138.7 of the Act, retirement is determined according to the following retirement rates:

For the Pension Plan of Management Personnel

For an employee who would attain 35 years of service at age 56 or older but before age 59	– 90% at 35 years of service at age 56 or older but before age 59 – 100% (of the remaining 90%) at 40 years of service
For the employee whose age and years of service would add up to 90 (criteria 90) at age 58 or 59	– 75% at criteria 90 – 100% (of the remaining 75%) at 35 years of service
For the employee whose age and years of service would add up to 90 (criteria 90) at age 60 or 61	– 80% at criteria 90 – 100% (of the remaining 80%) at 35 years of service or age 65 if the employee attains that age without attaining 35 years of service
For an employee who would attain age 61 than 15 years of service without exceeding 29 years of service	– 70% at age 61 – 100% (of the remaining 70%) at age 65
For an employee who would attain age 61 without having more than 15 years of service	– 60% at age 61 – 100% (of the remaining 60%) at age 65
For an employee who has at least 35 years of service and at least 56 years of age at the time of transfer	– 90% 6 months after the transfer – 100% (of the remaining 90%) at 40 years of service or age 65 if the employee attains that age without attaining 40 years of service

For an employee whose age and years of service at the time of transfer add up to 90 at age 58 to 60 and has less than 35 years of service	–80% 6 months after the transfer –100% (of the remaining 80%) at 35 years of service or age 65 if the employee attains that age without attaining 35 years of service
For an employee who is at least 61 years of age and who has less than 35 years of service at the time of transfer	–60% 6 months after the transfer –100% (of the remaining 60%) at 35 years of service or age 65 if the employee attains that age without attaining 35 years of service

For the Pension Plan of the members of the Sûreté du Québec

For an employee who would attain 25 years of service at age 50 or older but before age 55 or whose age and years of service would add up to 75 (criteria 75) before age 50	–15% at 25 years of service or criteria 75 if the employee is under 50 years of age –100% (of the remaining 15%) at 32 years of service
For an employee who would attain 25 years of service at age 55 or older but before age 60	–30% at 25 years of service –100% (of the remaining 30%) at 32 years of service or age 60 if the employee attains that age without attaining 32 years of service
For an employee who would attain age 60 without having more than 25 years of service	–60% at age 60 –100% (of the remaining 60%) at age 65
For an employee who is at least 60 years at the time of transfer	–60% 6 months after the transfer age –100% (of the remaining 60%) at 38 years of service or age 65 if the employee attains that age without attaining 38 years of service
For an employee who has at least 35 years of service without having attained age 60 at the time of transfer	–60% 6 months after the transfer –100% (of the remaining 60%) at 38 years of service or age 60 if the employee attains that age without attaining 38 years of service
For an employee whose age and years of service would add up to 75 at less than 50 years of age and less than 32 years of service at the time of transfer	–30% 6 months after the transfer –100% (of the remaining 30%) at 32 years of service
For an employee who has at least 25 years of service but less than 32 years of service at age 50 to 54 at the time of transfer	–30% 6 months after the transfer –100% (of the remaining 30%) at 32 years of service
For an employee who has at least 25 years of service but at least 32 years of service at age 55 to 59 at the time of transfer	–50% 6 months after the transfer –100% (of the remaining 50%) at 32 years of service or age 60 if the employee attains that age without attaining 32 years of service”.

2. This Regulation comes into force on 1 July 2019.

104011

Gouvernement du Québec

O.C. 221072, 25 June 2019

An Act respecting the Pension Plan of Peace Officers in Correctional Services
(chapter R-9.2)

Regulation respecting the application — Amendment

Regulation to amend the Regulation under the Act respecting the Pension Plan of Peace Officers in Correctional Services

WHEREAS, under the first paragraph of section 23 of the Act respecting the Pension Plan of Peace Officers in Correctional Services (chapter R-9.2), subject to sections 24 and 25, the years and parts of a year of service credited to an employee and the years and parts of a year of service for which pension credit was granted to the employee under the Act respecting the Government and Public Employees Retirement Plan (chapter R-10), the Act respecting the Pension Plan of Management Personnel (chapter R-12.1), the Act respecting the Teachers Pension Plan (chapter R-11) or the Act respecting the Civil Service Superannuation Plan (chapter R-12), must be credited under this plan on an actuarially equivalent basis established on the day following the date the employee qualifies for membership in this plan, if the contributions have not been refunded to the employee;

WHEREAS, under the fourth paragraph of section 23 of the Act respecting the Pension Plan of Peace Officers in Correctional Services, the actuarial values of the benefits are established on the basis of actuarial assumptions and methods determined by regulation and which may vary according to the pension plans and the benefits concerned;

WHEREAS, under the first paragraph of section 41.7 of the Act, the years and parts of a year of service credited to an employee under the pension plan of the Sûreté du Québec (C.T. 181151 dated 18 August 1992) may be credited under this plan on an actuarially equivalent basis if the employee qualifies for membership in this plan;

WHEREAS, under the third paragraph of section 41.7 of the Act, the actuarial values of the benefits are determined on the date Retraite Québec receives the transfer application and on the basis of actuarial assumptions and methods determined by regulation;

WHEREAS, under the first paragraph of section 41.12 of the Act, Retraite Québec must transfer to a locked-in retirement account, for the employee or person referred to in section 8.7 or 8.8, the actuarial value of the additional benefits referred to in section 66.1 and the actuarial value of the supplementary benefits referred to in section 66.4, determined on the date membership in this plan ceased, established in accordance with section 8.7 or 8.8;

WHEREAS, under the second paragraph of section 41.12 of the Act, the actuarial values of the benefits are established on the basis of actuarial assumptions and methods determined by regulation, which may vary with the benefits concerned;

WHEREAS, under subparagraph 3 of the first paragraph of section 130 of the Act, the Government may, by regulation, determine the actuarial assumptions and methods used to calculate the actuarial value of the benefits referred to in sections 23, 41.7 and 41.12, which may vary according to the pension plans and benefits concerned;

WHEREAS the Government made the Regulation under the Act respecting the Pension Plan of Peace Officers in Correctional Services (chapter R-9.2, r. 1) by Order in Council 1842-88 dated 14 December 1988;

WHEREAS it is expedient to amend the Regulation;

WHEREAS, under the first paragraph of section 130 of the Act, the Government exercises the regulatory powers provided for therein after Retraite Québec has consulted the pension committee referred to in section 139.3 of the Act;

WHEREAS, under section 40 of the Public Administration Act (chapter A-6.01), the Conseil du trésor, after consulting the Minister of Finance, exercises the powers conferred on the Government by an Act that establishes a pension plan applicable to personnel of the public and parapublic sectors, except certain powers;

WHEREAS the consultations have been held;

THE CONSEIL DU TRÉSOR DECIDES:

THAT the Regulation to amend the Regulation under the Act respecting the Pension Plan of Peace Officers in Correctional Services, attached hereto, is hereby made.

LOUIS TREMBLAY,
Le greffier du Conseil du trésor

Regulation to amend the Regulation under the Act respecting the Pension Plan of Peace Officers in Correctional Services

An Act respecting the Pension Plan of Peace Officers in Correctional Services
(chapter R-9.2, s. 130, 1st par., subpar. 3)

1. The Regulation under the Act respecting the Pension Plan of Peace Officers in Correctional Services (chapter R-9.2, r. 1) is amended in section 3.0.1

(1) by replacing paragraph 9 by the following:

"(9) Rate of increase of salaries:

The annual increase in salaries corresponds to the annual increase of the MPE, increased by the annual rate of salary increase.

For the Pension Plan of Peace Officers in Correctional Services

Years of service	Annual rate of increase
0 year	2.50%
1-6 years	4.30%
7 years	2.50%
8-10 years	0.80%
11-20 years	0.60%
21-30 years	0.30%
31 years and over	0%

For the Government and Public Employees Retirement Plan, the Teachers Pension Plan and the Civil Service Superannuation Plan

Years of service	Annual rate of increase
0-2 years	3.30%
3-5 years	3.20%
6-8 years	2.70%
9-11 years	2.40%
12-14 years	1.90%
15-17 years	1.30%
18-19 years	0.90%
20-24 years	0.55%
25-29 years	0.40%
30 years and over	0.35%

For the Pension Plan of Management Personnel

Age	Annual rate of increase
18-36 years	3.30%
37-38 years	3.10%
39-41 years	2.20%
42-44 years	1.70%
45-49 years	1.50%
50-54 years	1.20%
55 years and over	0.90%

For the Pension Plan of the members of the Sûreté du Québec

Years of service	Annual rate of increase
0-1 year	11.80%
2 years	13.20%
3 years	11.50%
4 years	8.90%
5 years	8.60%
6 years	6.00%
7-9 years	0.75%
10 years	1.50%
11-13 years	0.75%
14 years	2.00%
15-20 years	0.50%
21 years	2.00%
22 years and over	0.50%";

(2) by replacing paragraph 11 by the following:

"(11) Retirement age

For the purpose of section 41.12 of the Act, the retirement age is the age on the date on which membership ceases as determined pursuant to section 8.7 or 8.8 of the Act.

For the purposes of sections 23 and 41.7 of the Act, retirement is determined according to the following retirement rates:

For the Pension Plan of Peace Officers in Correctional Services

For an employee who would attain 30 years of service at age 50 or older but before age 61	– 70% at 30 years of service – 100% (of the remaining 70%) at 32 years of service
For an employee who would attain 60 years of age without having more than 29 years of service	– 50% at age 60 – 100% (of the remaining 50%) at 32 years of service or age 65 if the employee attains that age without attaining 32 years of service
For an employee who would attain 32 years of service before age 51 or who would attain 31 years of service at age 50	– 60% at 32 years of service before age 51 or 31 years of service at age 50 – 100% (of the remaining 60%) at 35 years of service
For an employee who has at least 32 years of service at the time of transfer	– 75% 6 months after the transfer – 100% (of the remaining 75%) at 35 years of service
For an employee who is at least 60 years of age or older and who has less than 32 years of service at the time of transfer	– 50% 6 months after the transfer – 100% (of the remaining 50%) at 32 years of service or at age 65 if the employee attains that age without attaining 32 years of service
For an employee with at least 30 years of service but less than 32 years of service and who is age 50 to 59 at the time of transfer	– 75% 6 months after the transfer – 100% (of the remaining 75%) at 32 years of service

For the Government and Public Employees Retirement Plan

For an employee who would attain 35 years of service before age 55	– 85% at 35 years of service – 100% (of the remaining 85%) at 40 years of service
For an employee who would attain 35 years of service at age 55 or older but before age 61	– 90% at 35 years of service – 100% (of the remaining 90%) at 40 years of service
For an employee who would attain age 61 and 30 years of service or age 60 and more than 29 years of service without having more than 34 years of service	– 85% at age 61 and 30 years of service or age 60 and more than 29 years of service without having more than 34 years of service – 100% (of the remaining 85%) at 35 years of service
For an employee who would attain age 61 and more than 15 years of service without having more than 29 years of service	– 70% at age 61 and more than 15 years of service without having more than 29 years of service – 100% (of the remaining 70%) at age 65

For an employee who would attain age 61 without having more than 15 years of service	– 60% at age 61 without having more than 15 years of service – 100% (of the remaining 60%) at age 65
For an employee who has at least 35 years of service at the time of transfer	– 80% 6 months after the transfer – 100% (of the remaining 80%) at 40 years of service or age 65 if the employee attains that age without attaining 40 years of service
For an employee who is at least 61 years of age or at least 60 years of age and who has 30 years of service without exceeding 34 years of service at the time of transfer	– 60% 6 months after the transfer – 100% (of the remaining 60%) at 35 years of service or age 65 if the employee attains that age without attaining 35 years of service

For the Pension Plan of Management Personnel

For an employee who would attain 35 years of service at age 56 or older but before age 59	– 90% at 35 years of service at age 56 or older but before age 59 – 100% (of the remaining 90%) at 40 years of service
For an employee whose age and years of service would add up to 90 (criteria 90) at age 58 or 59	– 75% at criteria 90 – 100% (of the remaining 75%) at 35 years of service
For an employee whose age and years of service would add up to 90 (criteria 90) at age 60 or 61	– 80% at criteria 90 – 100% (of the remaining 80%) at 35 years of service or age 65 if the employee attains that age without attaining 35 years of service
For an employee who would attain age 61 and more than 15 years of service without exceeding 29 years of service	– 70% at age 61 – 100% (of the remaining 70%) at age 65
For an employee who would attain age 61 without having more than 15 years of service	– 60% at age 61 – 100% (of the remaining 60%) at age 65
For an employee who has at least 35 years of service and is at least age 56 at the time of transfer	– 90% 6 months after the transfer – 100% (of the remaining 90%) at 40 years of service or age 65 if the employee attains that age without attaining 40 years of service
For an employee whose age and years of service add up to 90, who is 58 to 60 years of age and has less than 35 years of service at the time of transfer	– 80% 6 months after the transfer – 100% (of the remaining 80%) at 35 years of service or age 65 if the employee attains that age without attaining 35 years of service

For an employee who is at least 61 years of age and has less than 35 years of service at the time of transfer	– 60% 6 months after the transfer – 100% (of the remaining 60%) at 35 years of service or age 65 if the employee attains that age without attaining 35 years of service

For the Pension Plan of members of the Sûreté du Québec

For an employee who would attain 25 years of service at age 50 or older but before age 55 or whose age and years of service would add up to 75 (criteria 75) before age 50	– 15% at 25 years of service or criteria 75 if the employee is less than 50 years of age – 100% (of the remaining 15%) at 32 years of service
For an employee who would attain 25 years of service at age 55 or older but before age 60	– 30% at 25 years of service – 100% (of the remaining 30%) at 32 years of service or age 60 if the employee attains that age without attaining 32 years of service
For an employee who would attain age 60 without having more than 25 years of service	– 60% at age 60 – 100% (of the remaining 60%) at age 65
For an employee who is at least 60 years of age at the time of transfer	– 60% 6 months after the transfer – 100% (of the remaining 60%) at 38 years of service or age 65 if the employee attains that age without attaining 38 years of service
For an employee who has at least 32 years of service without attaining age 60 at the time of transfer	– 60% 6 months after the transfer – 100% (of the remaining 60%) at 38 years of service or age 60 if the employee attains that age without attaining 38 years of service
For an employee whose age and years of service add up to 75 at the time of transfer while the employee is less than 50 years of age and has less than 32 years of service	– 30% 6 months after the transfer – 100% (of the remaining 30%) at 32 years of service
For an employee who has at least 25 years of service but less than 32 years of service and is 50 to 54 years of age at the time of transfer	– 30% 6 months after the transfer – 100% (of the remaining 30%) at 32 years de service
For an employee who has at least 25 years of service but less than 32 years of service and is 55 to 59 years of age at the time of transfer	– 50% 6 months after the transfer – 100% (of the remaining 50%) at 32 years of service or age 60 if the employee attains that age without attaining 32 years of service”

2. This Regulation comes into force on 1 July 2019.

104012

Index

Abbreviations: **A**: Abrogated, **N**: New, **M**: Modified

	Page	Comments
Building Act — Construction Code (chapter B-1.1)	1439	Draft
Building Act — Safety Code (chapter B-1.1)	1612	Draft
Charter of human rights and freedoms, amended (Bill 21) (2019, c. 12)	1419	
Construction Code (Building Act, chapter B-1.1)	1439	Draft
Determination of a section of Route 167 Nord, north of Chibougamau, for construction, repair or maintenance work and certain provisions of the Highway Safety Code or of a regulation thereunder (Highway Safety Code, chapter C-24.2)	1437	N
Exemption from the application of certain provisions of the Highway Safety Code or of a regulation thereunder — Amendment to Order in Council 871-2000 dated 28 June 2000 (Highway Safety Code, chapter C-24.2)	1437	N
Government and Public Employees Retirement Plan, An Act respecting the… — Regulation respecting the application (chapter R-10)	1615	M
Highway Safety Code — Determination of a section of Route 167 Nord, north of Chibougamau, for construction, repair or maintenance work and certain provisions of the Highway Safety Code or of a regulation thereunder (chapter C-24.2)	1437	N
Highway Safety Code — Exemption from the application of certain provisions of the Highway Safety Code or of a regulation thereunder — Amendment to Order in Council 871-2000 dated 28 June 2000 (chapter C-24.2)	1437	N
Highway Safety Code — Use of tires specifically designed for winter driving (chapter C-24.2)	1612	Draft
Laicity of the State, An Act respecting the… (Bill 21) (2019, c. 12)	1419	
List of Bills sanctioned (16 June 2019)	1403	
Ministère de l'Immigration, de la Diversité et de l'Inclusion, An Act respecting the…, amended (Bill 9) (2019, c. 11)	1405	
Pension Plan of Management Personnel, An Act respecting the… — Regulation respecting the application (chapter R-12.1)	1618	M
Pension Plan of Peace Officers in Correctional Services, An Act respecting the… — Regulation respecting the application (chapter R-9.2)	1621	M

Québec Immigration Act, amended (Bill 9) 1405
(2019, c. 11)

Québec's socio-economic prosperity and adequately meet labour market needs through successful immigrant integration, An Act to increase… (Bill 9). 1405
(2019, c. 11)

Safety Code. . . . . 1612 Draft
(Building Act, chapter B-1.1)

State religious neutrality and, in particular, to provide a framework for requests for accommodations on religious grounds in certain bodies, An Act to foster adherence to…, amended (Bill 21) 1419
(2019, c. 12)

Use of tires specifically designed for winter driving. . . . . 1612 Draft
(Highway Safety Code, chapter C-24.2)